SECTION 5
PARTS LISTS AND DIAGRAMS

5.1 MAINFRAME PARTS (PART NO. 32110)

CIRCUIT NO.	DESCRIPTION	ESI PART NO.
	SUBASSEMBLY, FRONT END	46096
	SUBASSEMBLY, CRT CASE	46095
	CIRCUIT ASSEMBLY, MOTHERBOARD	45577
	CIRCUIT ASSEMBLY, DIGITAL CARD	45237
	CIRCUIT ASSEMBLY, ANALOG CARD	45239
	IC MK4816 RAM (2110 ONLY)	45263
	CIRCUIT ASSEMBLY, CASSETTE/RS232 (2110 ONLY)	45905
	CIRCUIT ASSEMBLY, MEMORY EXPANSION	47217
	ASSEMBLY, POWER SUPPLY MODULE	45845
	PIVOT ROD	45367
	BACK PANEL, R.H.	44964
	SIDE PANEL, R.H.	44931
	CABLE MOTHERBOARD-TO-KEYBOARD	47112
	COVER, CRT CASE	45078
	STRAIN RELIEF BRACKET	45081
	BRACKET ANGLE, SIDE PANEL	46288
	POWER CORD	24077
	LABEL (WARNING DANGEROUS VOLTAGE)	46047
	MANUAL, OPERATORS 2100/2110	46508
	MANUAL, SERVICE 2100/2110	46507
	WELDMENT, CASE	45157
	CORD WRAP	45782
	FEET, 0.75SQ X 0.5 HIGH	46446
	FEET, ROUND 0.5 DIA	4276
	ASSEMBLY, CONN. COVER, HANDLER	46947
	CABLE ASSEMBLY, TAPEDECK TO RS232 (2110 ONLY)	47254
	HOLDER, PCB	46287
	SHIELD, SIDE, POWER SUPPLY	45957
	CASSETTE, TAPE	47509

5.2 FRONT END SUB ASSEMBLY (PART NO. 46Ø96)

CIRCUIT NO.	DESCRIPTION	ESI PART NO.
	END CAP L.H., PAINTED	47271
	EXT, UPPER CUT	44818
	EXT, LOWER CUT	44958
	BRACKET UPPER L.H.	44828
	BRACKET UPPER R.H.	44827
	BRACKET LOWER	44826
	BRACKET SIDE PANEL	45213
	SUB PANEL, WINDOW	45350
	SUB PANEL, UPPER R.H.	45337
	FRONT PANEL, UPPER L.H.	45338
	WINDOW, CRT	45349
	FRONT PANEL, UPPER R.H.	45336
	FRONT PANEL, LOWER	45340
	BUTTON, KEYBOARD (GRA)	45608
	END CAP R.H., PAINTED	47272
	HANDLE, PAINTED	47166
	PIVOT, PLASTIC HANDLE	44892
	PIN, HANDLE	44894
	COVER, HANDLE	44895
	BUTTON, HANDLE	44896
	SPRING, HANDLE	44897
	PLATE, HANDLE SIDE	44891
	SPACING STRIP MB	45351
	SPRING, TAPEDECK BUTTON (2110 ONLY)	46331
	SPACER, TAPEDECK BUTTON (2110 ONLY)	46332
	TAPEDECK (2110 ONLY)	46447
	CIRCUIT ASSEMBLY, KEYBOARD	45573
	BUTTON, KEYBOARD (BLU)	46510
	BUTTON, KEYBOARD (GOLD)	45348
	FOOT, ROUND STICKY	22343

5.2.1 Keyboard-to-Motherboard Connector Cable Assembly (Part No. 47112)

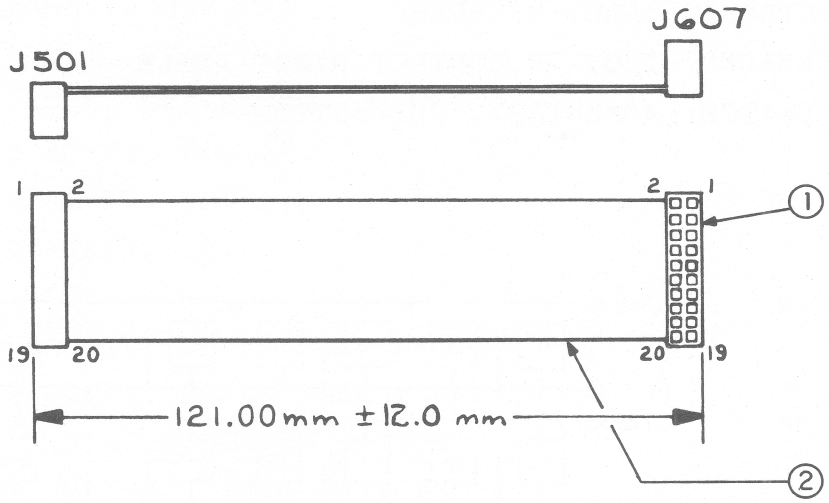

ITEM	QTY REQD	DWG SIZE	CLASS CODE	PART NO	MATERIAL OR DESCRIPTION
2	.4'	YC	—	44734	CABLE, RIBBON
1	2	YC	—	43865	CONNECTOR, 20 PIN, ANSLEY

Figure 5-1. Keyboard-to-Motherboard Cable Assembly (Part No. 47112)

5.2.2 Keyboard Circuit Assembly (Part No. 45573)

CIRCUIT NO.	DESCRIPTION	ESI PART NO.
	CIRCUIT CARD, KEYBOARD	45572
P501	HEADER, I/O, 20 CONTACT RIGHT ANGLE	46501
S1-S32	SWITCH, MOMENTARY, PUSHBUTTON	46500

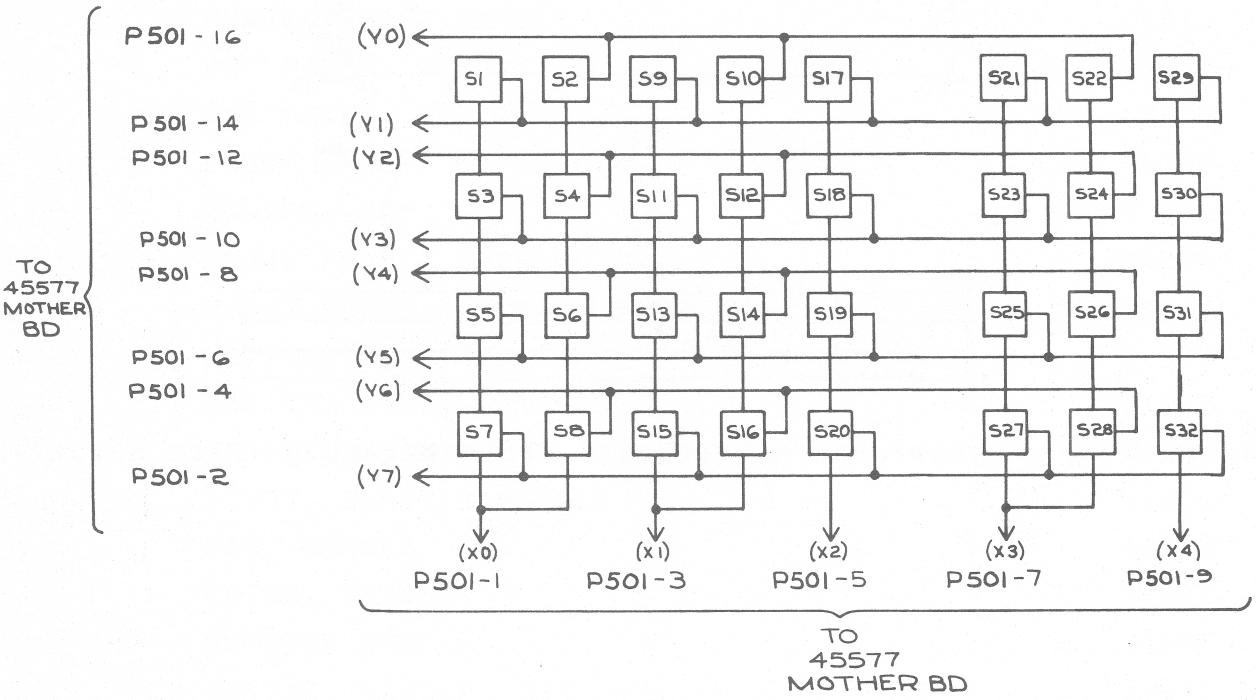

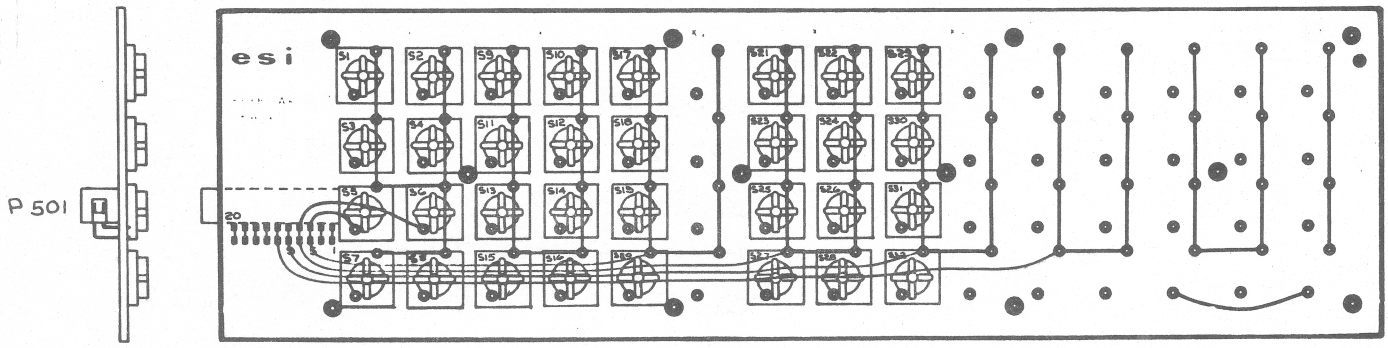

Figure 5-2. Keyboard Circuit Assembly (Part No. 45573)

5.3 CRT SUB ASSEMBLY (PART NO. 46095)

CIRCUIT NO.	DESCRIPTION	ESI PART NO.
	CASE, LOWER CRT	45075
	PANEL, REAR L.H.	45070
	PANEL, SEPARATOR, CRT	45291
	BRACKET, PCB MT.	45204
	BRACKET, CRT L.H.	45783
	BRACKET, CRT	44825
	GUIDE, PCB	45741
	BRACKET, UPPER BACK PANEL	45241
	BRACKET, LOWER BACK PANEL	45242
	INSULATOR, POWER SWITCH	45277
	ACTUATOR, POWER SWITCH	45279
	ANGLE BRACKET, POWER SWITCH	45280
	SPACER, POWER SWITCH	45281
	BRACKET, PIVOT ROD	45366
	FAN	45704
	RECEPTACLE, AC	24078
	SWITCH, 120-220	29233
	SCREEN, FAN	46289
	FILTER, FAN	46932
	CRT 5 INCH	45878
	ASSEMBLY, DEFLECTION YOKE	46490
	CABLE, CRT - VIDEO CARD	46504
	SWITCH, POWER, PUSHBUTTON	23164
	SPRING, RETURN	46505
	REWORK, COVER	46290
	CABLE, BACK PANEL - POWER SUPPLY	47115
	MOUNT, FAN GUARD	46038
	CIRCUIT ASSEMBLY, DEFLECTION CARD	45470
	CIRCUIT ASSEMBLY, SIGNAL CONDITIONER	45468
	CABLE ASSEMBLY, SIGNAL-TO-DEFLECTION	47116
	INSERT, SHEET EDGE	50749
	STANDOFF, COVER	46292

5.3 CRT SUB ASSEMBLY (PART NO. 46Ø95) (cont)

CIRCUIT NO.	DESCRIPTION	ESI PART NO.
	SPACER, FAN MOUNT Ø.45OD x Ø.15T	46291
	BAR, MTG FAN FILTER	46264
	SPACER 3/8 x Ø.6L x 6-32	29165
	FUSE HOLDER HIGH PROFILE	45968
	3AG FUSE CARRIER, GRAY	45966
	3AG FUSE 2A SLOW-BLOW	137ØØ
	5 x 2Ø METRIC FUSE CARRIER, BLK	45965
	FUSE 1A SLOW-BLOW (EUROPE)	

5.3.1 CRT Connector Cable Assembly (Part No. 46504)

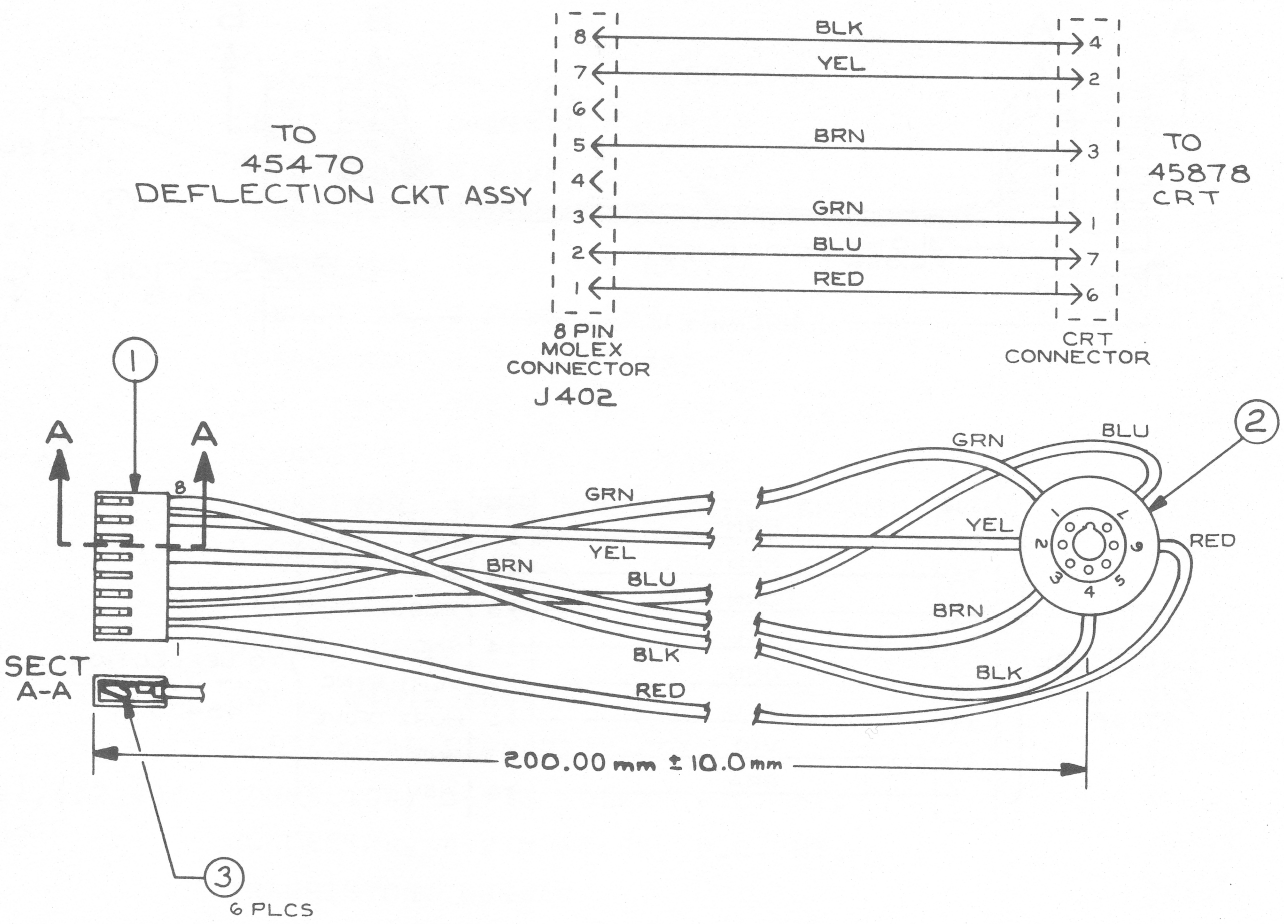

ITEM	QTY REQD	DWG SIZE	CLASS CODE	PART NO	MATERIAL OR DESCRIPTION
3	6	YC	—	45887	CRIMP TERMINAL
2	1	YC	—	47123	CONNECTOR, 7 PIN MINI TUBE, FEM
1	1	YC	—	46633	CONNECTOR, MOLEX, 8 PIN

Figure 5-3. CRT Connector Cable Assembly (Part No. 46504)

5.3.2 Deflection-to-Signal Conditioner Cable Assembly (Part No. 47116)

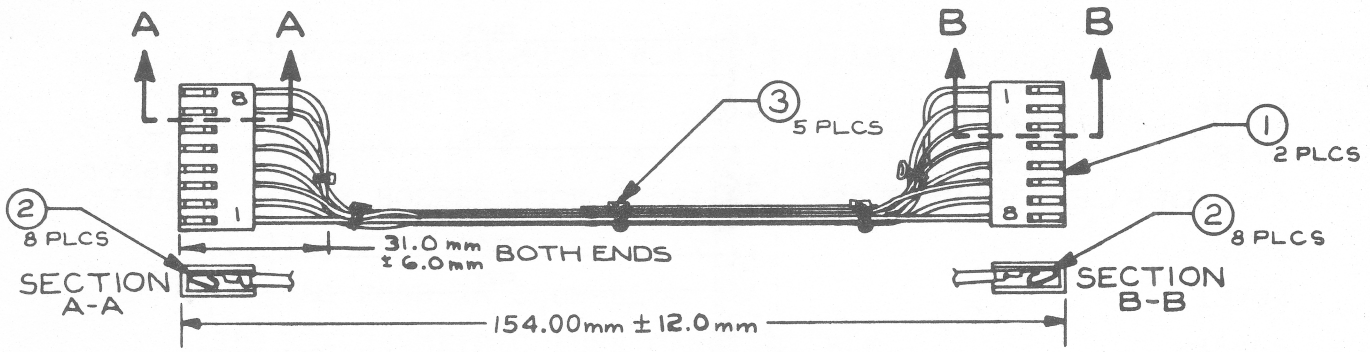

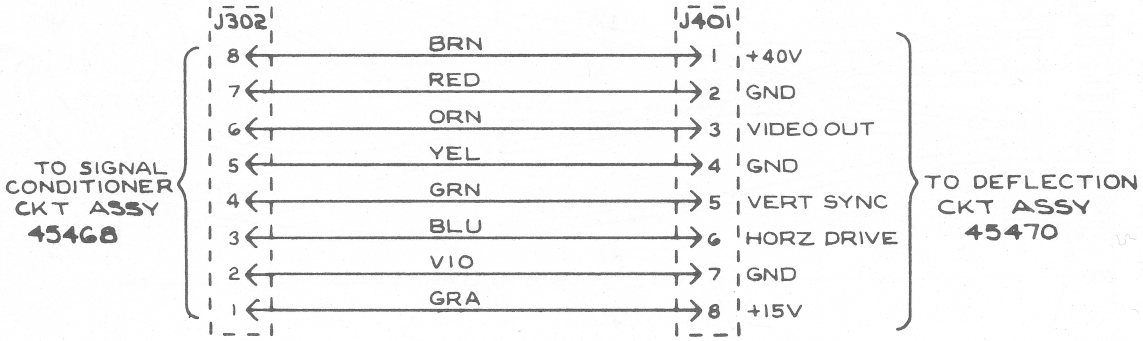

ITEM	QTY REQD	DWG SIZE	CLASS CODE	PART NO	MATERIAL OR DESCRIPTION
3	5	YC	—	6147	CABLE TIE
2	16	YC	—	45887	CRIMP TERMINAL
1	2	YC	—	46633	CONNECTOR, MOLEX, 8 PIN

Figure 5-4. Deflection-to-Signal Conditioner Cable Assembly (Part No. 47116)

5.3.3 Deflection Circuit Assembly (Part No. 45470)

CIRCUIT NO.	DESCRIPTION	ESI PART NO.
	CIRCUIT CARD, VIDEO DEFLECTION	45469
C1	CAPACITOR, 0.015µF MYLAR	20900
C2,3,7,8	CAPACITOR, 0.01µF "GAP CAP"	46484
C4	CAPACITOR, 100µF, 50V RADIAL	46483
C6,5	CAPACITOR, 50µF, 50V RADIAL	46482
C9,15	CAPACITOR, 0.02µF 100V CERAMIC	12115
C10	CAPACITOR, 0.22µF CERAMIC	13680
C11	CAPACITOR, 470µF, 50V ELECT. AXIAL	1942
C12,13	CAPACITOR, 2.2µF, 20V TANT	13283
C14	CAPACITOR, 4.7µF MONOLITHIC CERAMIC	47536
CR1-3	DIODE, 1N4007	12161
CR4	DIODE, 1N4005	1779
CR6	DIODE, 1N914	12356
L1	COIL, WIDTH EW4472	46487
L2	HORIZONTAL LINEARITY COIL	46486
P401,402,404	CONNECTOR, 8-PIN MOLEX, P.C. MT.	46631
P403	CONNECTOR, 4-PIN MOLEX, P.C. MT.	46629
Q1	TRANSISTOR, BU406D	46491
Q2	TRANSISTOR, 2N3053	12232
Q3,4,5	TRANSISTOR, 2N4918	18753
Q6	TRANSISTOR, TIP31A	47294
Q7	TRANSISTOR, 2N3906	18754
Q8	TRANSISTOR, 2N3904	18751
R1,2	RESISTOR, 100kΩ, 1/4W	13945
R3	RESISTOR, 2.7kΩ, 1/4W	13925
R4	RESISTOR, 82kΩ, 1/4W	24812
R5	RESISTOR, 1.2Ω, 1/2W	20828
R6	RESISTOR, 68Ω, 5W	47292
R7	RESISTOR, 47Ω, 1/2W	2024
R8,9	RESISTOR, 1Ω, 1/2W	12448
R10	RESISTOR, 33Ω, 1/2W	46485
R11	RESISTOR, 1kΩ, 1/2W	1969

5.3.3 Deflection Circuit Assembly (cont)

CIRCUIT NO.	DESCRIPTION	ESI PART NO.
R12	RESISTOR, 3.3kΩ, 1/4W	13926
R13,14	RESISTOR, 470Ω, 1/4W	13915
R15	RESISTOR, 3.3Ω, 2W	47293
R16	RESISTOR, 1kΩ, 1/4W	13920
R17	TRIMMER, 2.0MΩ UPRIGHT P.C. MT.	46460
R18,20	TRIMMER, 100kΩ UPRIGHT P.C. MT.	46459
R19	TRIMMER, 500Ω UPRIGHT P.C. MT.	46457
R21	TRIMMER, 10kΩ UPRIGHT P.C. MT.	46458
T1	BUFFER X-FMR	46488
T2	FLYBACK X-FMR ASSEMBLY	47064
	HEATSINK, TO-220 CLIP ON	47651
	INSULATOR, RECTANGULAR, SILICON	46256
	SHOULDER WASHER, #4 INSULATING	41937
	BOX, FLYBACK X-FMR	45445
	SCREW 6-32 x 0.25 PHP	3640
	INSERT, SHEET EDGE, 6-32 (SOUTHCO)	50749

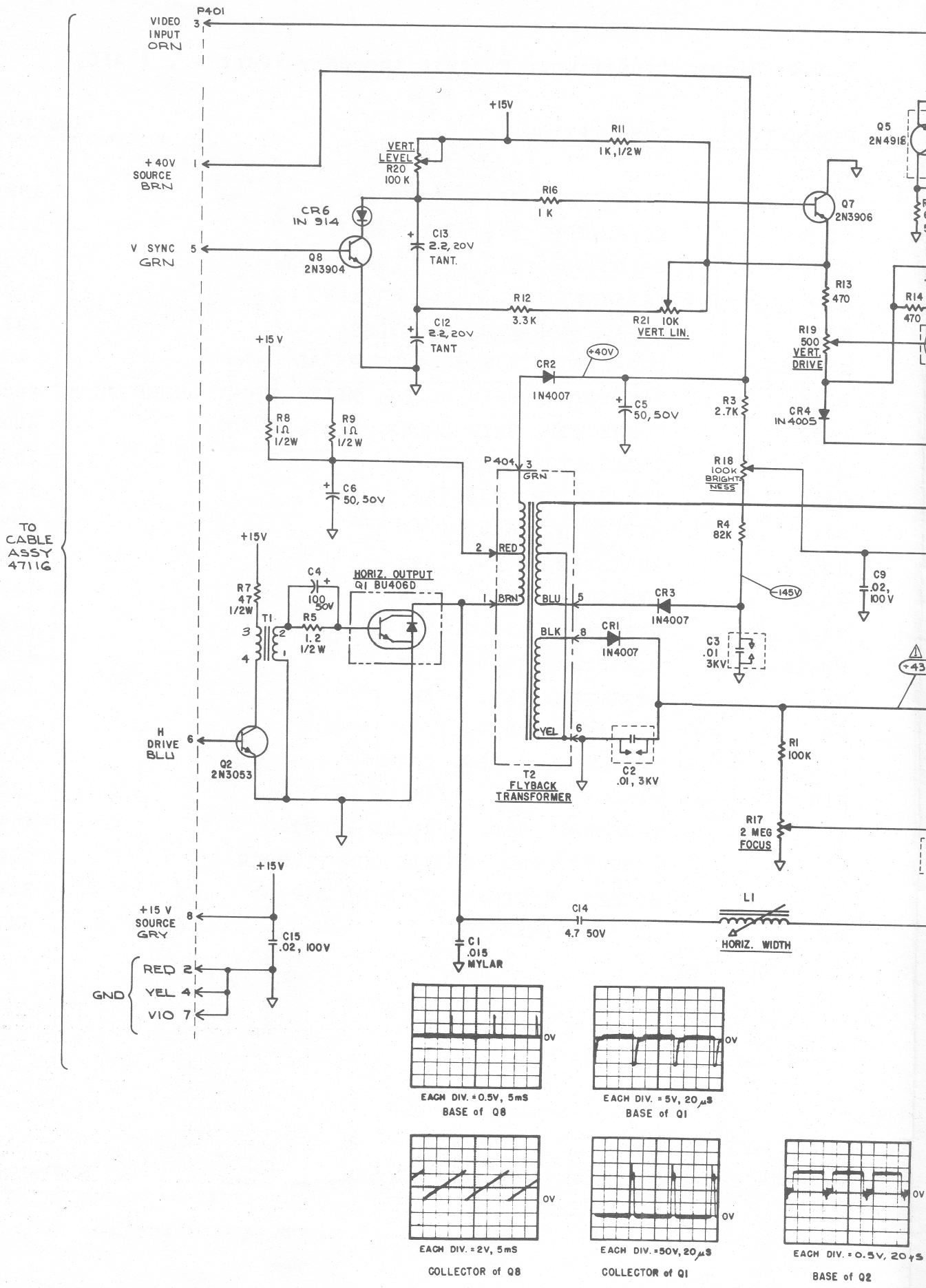
TO CABLE ASSY 47116
P401
VIDEO INPUT ORN
3
+40V SOURCE BRN
1
V SYNC GRN
5
+15V
VERT. LEVEL R20 100 K
R11 1K, 1/2W
R16 1 K
CR6 IN 914
Q8 2N3904
C13 2.2, 20V TANT.
C12 2.2, 20V TANT
R12 3.3K
R21 10K VERT. LIN.
Q5 2N4918
Q7 2N3906
R13 470
R14 470
R19 500 VERT. DRIVE
CR4 IN4005
+40V
CR2 IN4007
C5 50, 50V
R3 2.7K
R8 1Ω 1/2W
R9 1Ω 1/2W
C6 50, 50V
P404
3 GRN
R18 100K BRIGHTNESS
R4 82K
C9 .02, 100V
-145V
2 RED
1 BRN
BLU 5
BLK 8
YEL 6
CR3 IN4007
CR1 IN4007
C3 .01 3KV
C4 100 50V
HORIZ. OUTPUT Q1 BU406D
R7 47 1/2W
T1
R5 1.2 1/2W
H DRIVE BLU
6
Q2 2N3053
T2 FLYBACK TRANSFORMER
C2 .01, 3KV
R1 100K
R17 2 MEG FOCUS
+43
+15 V SOURCE GRY
8
C15 .02, 100V
GND
RED 2
YEL 4
VIO 7
C14 4.7 50V
L1 HORIZ. WIDTH
C1 .015 MYLAR
0V
EACH DIV. = 0.5V, 5mS
BASE of Q8
EACH DIV. = 5V, 20 μS
BASE of Q1
EACH DIV. = 2V, 5mS
COLLECTOR of Q8
EACH DIV. = 50V, 20 μS
COLLECTOR of Q1
EACH DIV. = 0.5V, 20 μS
BASE of Q2

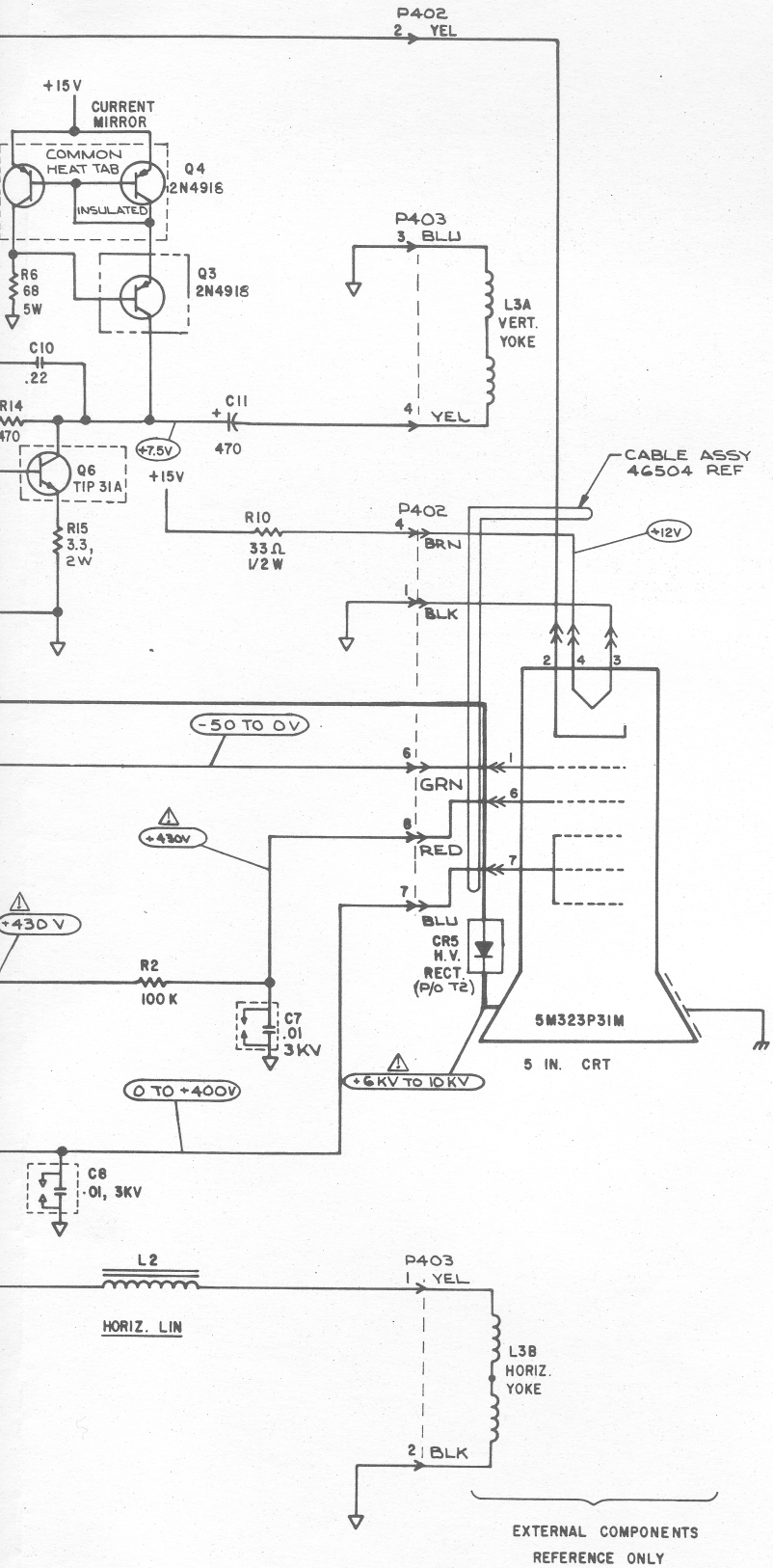

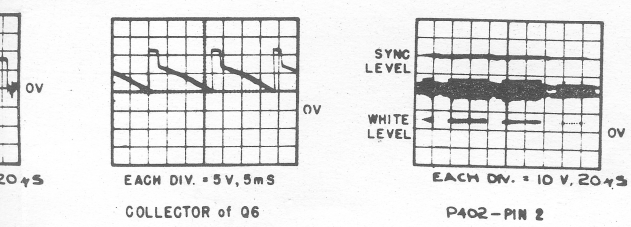

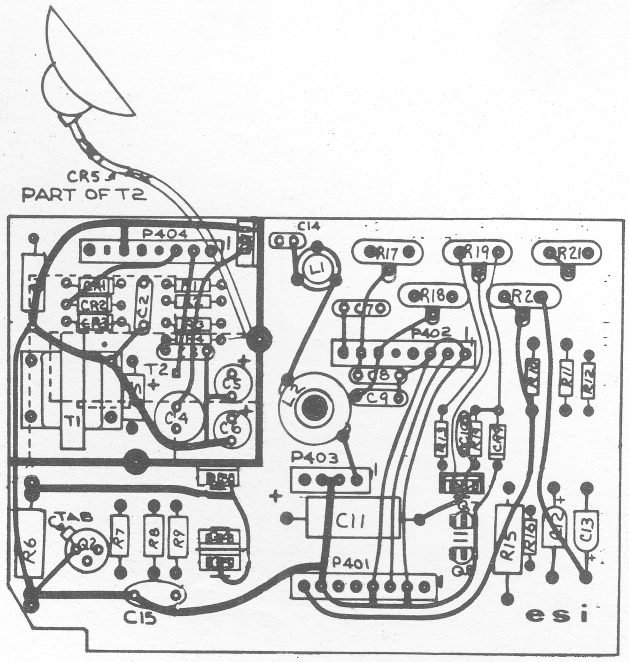

DANGER

⚠ HIGH VOLTAGES ARE PRESENT. USE EXTREME CAUTION TO PREVENT POSSIBLE PHYSICAL INJURY AND/OR ELECTRICAL SHOCK.

NOTES:

1. ALL RESISTOR VALUES ARE IN OHMS, 1/4W, 10% UNLESS OTHERWISE STATED.
2. ALL CAPACITORS ARE IN μF UNLESS OTHERWISE STATED.

Figure 5-5. Deflection Circuit Assembly (Part No. 45470)

5.3.4 Signal Conditioner Circuit Assembly (Part No. 45468)

CIRCUIT NO.	DESCRIPTION	ESI PART NO.
C1	CAPACITOR, 22µF, TANT 15V	18852
C2,3	CAPACITOR, Ø.ØlµF, CERAMIC	12144
C4,8	CAPACITOR, Ø.22µF, CERAMIC	13680
C5	CAPACITOR, Ø.ØØ47µF, MYLAR	13299
C6	CAPACITOR, Ø.ØlµF, MYLAR	12260
C7	CAPACITOR, 470µF, ELEC AXIAL	1942
P301	CONNECTOR, 8PIN MOLEX, MALE, RIGHT ANGLE PC MT	46632
P302	CONNECTOR, 8PIN MOLEX, MALE, PC MT	46631
Q1,2,3,5,6	TRANSISTOR, 2N3904	18751
Q4	TRANSISTOR, 2N3053	12232
R1,7	RESISTOR, 56kΩ, 1/4W	13943
R2,12,13	RESISTOR, 15kΩ, 1/4W	13935
R3,16	RESISTOR, 220Ω, 1/4W	13911
R4,9,15	RESISTOR, 2.2kΩ, 1/4W	13924
R5,10,18-20	RESISTOR, 10kΩ, 1/4W	13933
R6	RESISTOR, 1kΩ, 1/4W	13920
R8	RESISTOR, 68kΩ, 1/4W	13902
R11	RESISTOR, 1.5kΩ, 1/4W	13922
R14	RESISTOR, 47Ω, 1/4W	13901
R17	TRIMMER, 500Ω, UPRIGHT PC MT.	46457
	CIRCUIT CARD, SIGNAL CONDITIONER	45467
	SOCKET, 8 PIN, I.C. MINI DIP	22410
U1	IC 555 TIMER	20721

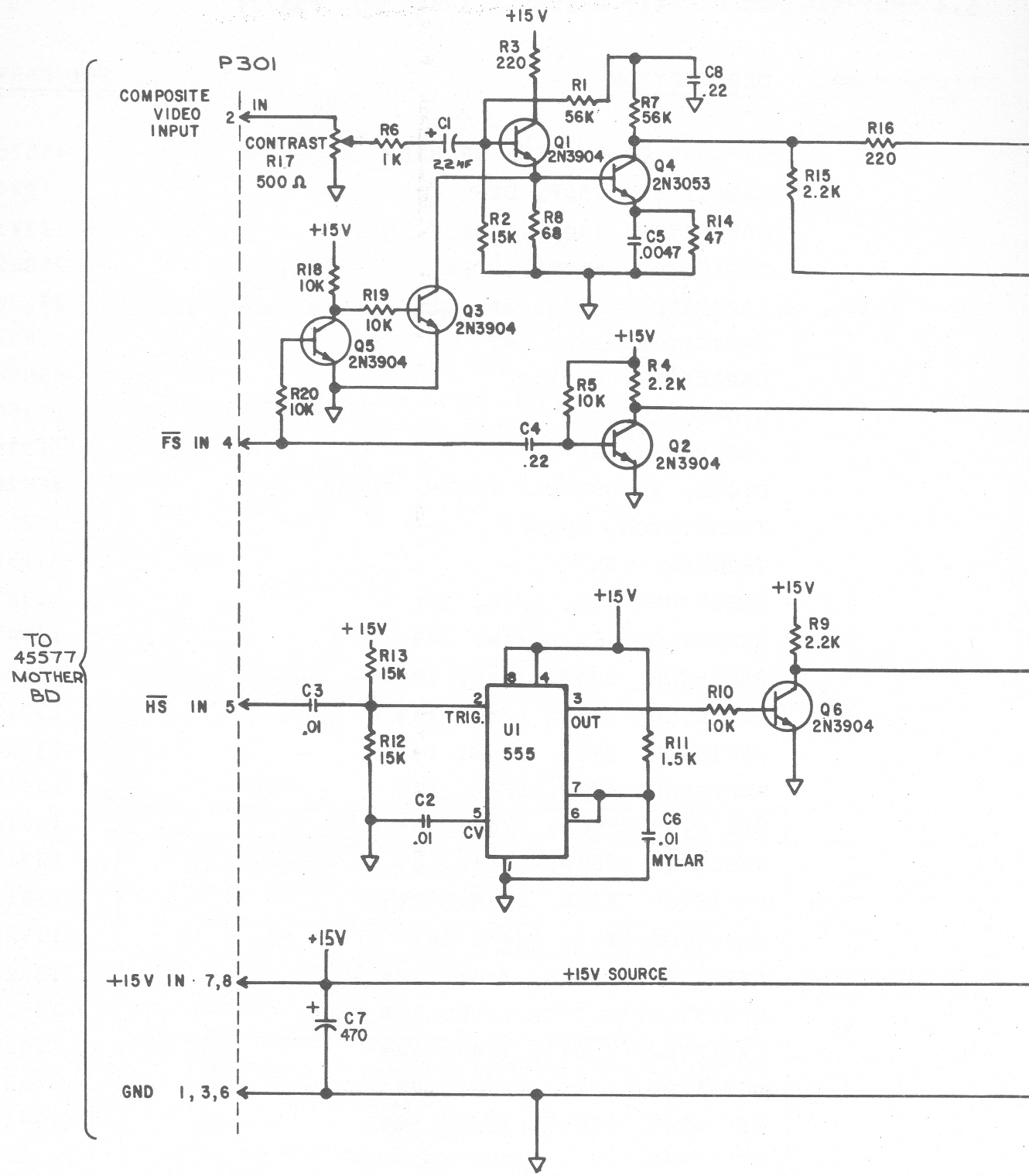

NOTES:

1. ALL RESISTOR VALUES ARE IN OHMS, 1/4W, 10% UNLESS OTHERWISE STATED.
2. ALL CAPACITORS ARE IN μF UNLESS OTHERWISE STATED.

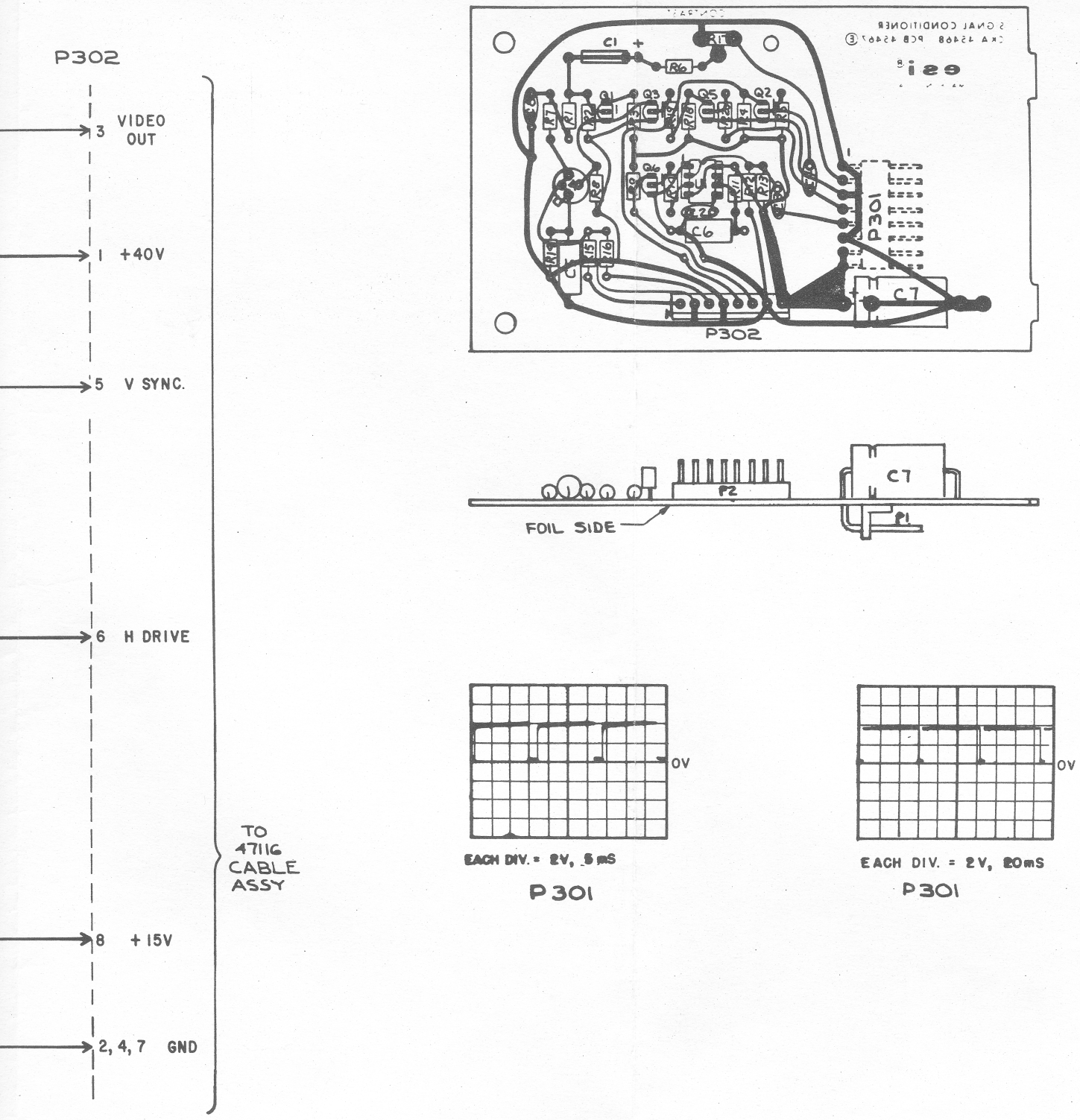

Figure 5-6. Signal Conditioner Circuit Assembly (Part No. 45468)

5.4 MOTHERBOARD CIRCUIT ASSEMBLY (PART NO. 45577)

CIRCUIT NO.	DESCRIPTION	ESI PART NO.
	CIRCUIT CARD, MOTHERBOARD	45576
	CAPACITOR, 25pF, DISC	1924
	CAPACITOR, 100pF, 1000V, DISC	12241
	CAPACITOR, 560pF, POLY	25922
	CAPACITOR, 10pF, 5%, DISC	43130
	CAPACITOR, 1µF, 50V	43852
	CAPACITOR, 0.01µF	45658
	DIODE, 1N914	12356
	DIODE, 1N4005	1779
	DIODE, ADJUSTABLE ZENER, TL430	46620
	TRANSISTOR, 2N3904	18751
	TRIMMER, 10kΩ	78156
	RESISTOR, 47Ω, 1/4W, 10%	13901
	RESISTOR, 68Ω, 1/4W, 10%	13902
	RESISTOR, 120Ω, 1/4W, 10%	13908
	RESISTOR, 330Ω, 1/4W, 10%	13913
	RESISTOR, 390Ω, 1/4W, 10%	13914
	RESISTOR, 470Ω, 1/4W, 10%	13915
	RESISTOR, 560Ω, 1/4W, 10%	13916
	RESISTOR, 680Ω, 1/4W, 10%	13917
	RESISTOR, 820Ω, 1/4W, 10%	13919
	RESISTOR, 1kΩ, 1/4W, 10%	13920
	RESISTOR, 1.8kΩ, 1/4W, 10%	13923
	RESISTOR, 4.7kΩ, 1/4W, 10%	13927
	RESISTOR, 5.6kΩ, 1/4W, 10%	13928
	RESISTOR, 10kΩ, 1/4W, 10%	13933
	RESISTOR, 220kΩ, 1/4W, 10%	13949
	RESISTOR, 39Ω, 1/4W, 10%	21219
	RESISTOR, 100Ω, 1/4W, 1%	21720
	RESISTOR PAK, 330Ω, SIP	46072
	RESISTOR PAK, 10kΩ, SIP	46560
	IC, 7410	20603

5.4 MOTHERBOARD CIRCUIT ASSEMBLY (PART NO. 45577) (cont)

CIRCUIT NO.	DESCRIPTION	ESI PART NO.
	IC, 7442	20608
	IC, 7404	20695
	IC, LM311	29544
	IC, DP8304B	45262
	IC, MK4816, RAM	45263
	IC, MC6847	45472
	IC, DM8131	45527
	IC, 4N28, OPTO ISOLATOR	46502
	IC, 74LS163A	45647
	IC, 8279	45651
	IC, Z80µP	45653
	IC, 74LS139	45656
	IC, 74S373, OCTAL D LATCH	46201
	IC, MK4118	46405
	IC, MK3882, PROGRAM COUNTER TIMER	46407
	IC, PAL14L4 (PRGM ARRAY LOGIC CHIP)	47321
	IC, 74LS288, PROGRAMMED	47323
	IC, 74LS288, PROGRAMMED	47324
	SOCKET, IC, 14 PIN	19189
	SOCKET, IC, 16 PIN	20360
	SOCKET, MINI DIP, 8 PIN	22410
	SOCKET, IC, 40 PIN	41342
	SOCKET, IC, 28 PIN	43844
	SOCKET, IC, 20 PIN	45660
	SOCKET, IC, 6 PIN	45831
	CRYSTAL, 7.68MHz	45662
	CRYSTAL, 3.58MHz	45663
	I/O HEADER, 20 PIN, RT ANGLE, 2 LEVEL	46501
	SWITCH, SPST MOMENTARY ON PUSH BUTTON	44520
	CONNECTOR, PCB, 100 PIN	45661
	BUSS STRIP	23997
	LED, RED, 1/8 DIA	24009

CIRCUIT NO.	DESCRIPTION	ESI PART NO.
	CABLE ASSEMBLY, MOTHERBOARD-TO-POWER SUPPLY	47111
	PIVOT, BRACKET	45163
	PIVOT, STIFFENER	46031
	CABLE ASSEMBLY, MOTHERBOARD-TO-CRT	47110
	BRACE, RH SIDE	46227
	BRACE, FRONT	46228
	BRACE, BACK	46229
	CABLE CLAMP	1703
	CABLE CLAMP	5269

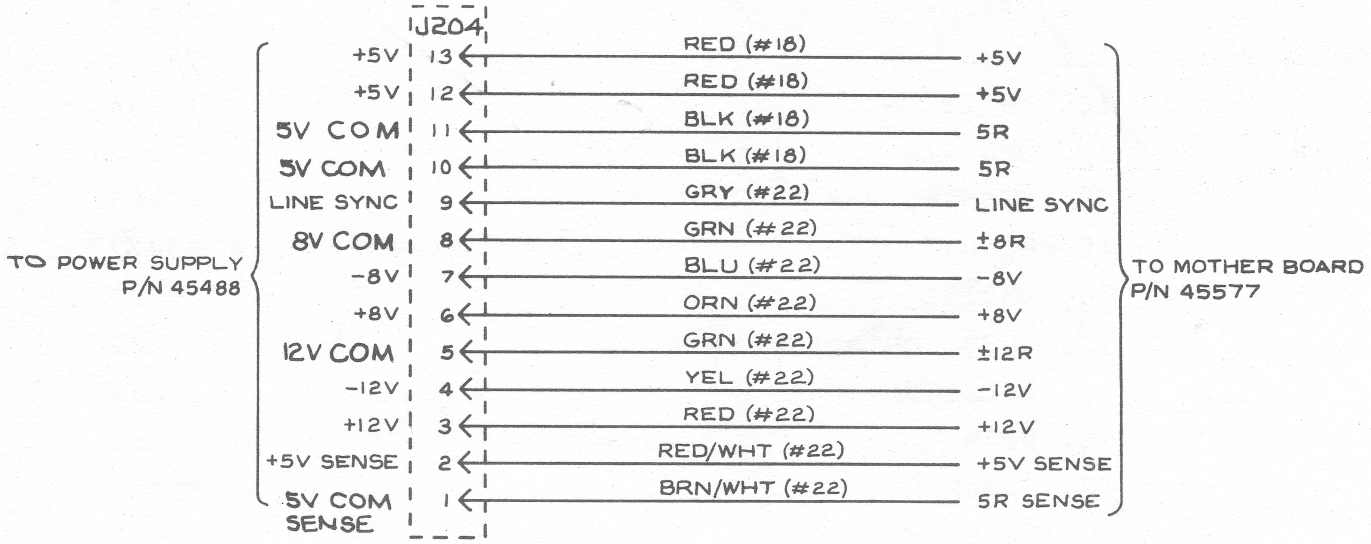

Figure 5-7. Motherboard-to-Power Supply Cable Assembly (Part No. 47111)

5.4.1 Motherboard-to-Power Supply Interconnect Cable Assembly (Part No. 47111)

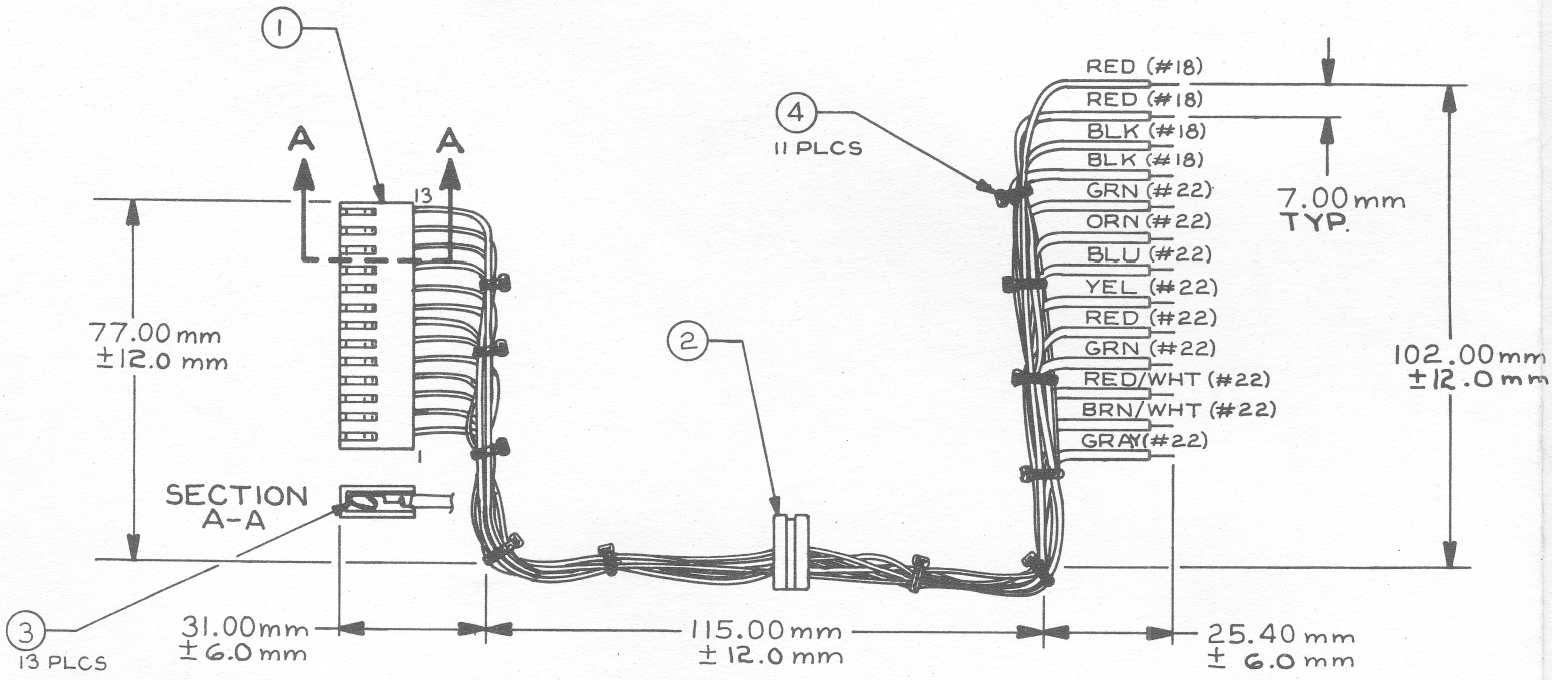

ITEM	QTY REQD	DWG SIZE	CLASS CODE	PART NO	MATERIAL OR DESCRIPTION
4	11	YC	—	6147	CABLE TIE
3	13	YC	—	45887	CRIMP TERMINAL
2	1	YC	—	47125	GROMMET, HORSESHOE
1	1	YC	—	46637	CONNECTOR, MOLEX, 13 PIN

5.4.2 Motherboard-to-CRT Interconnect Cable Assembly (Part No. 47110)

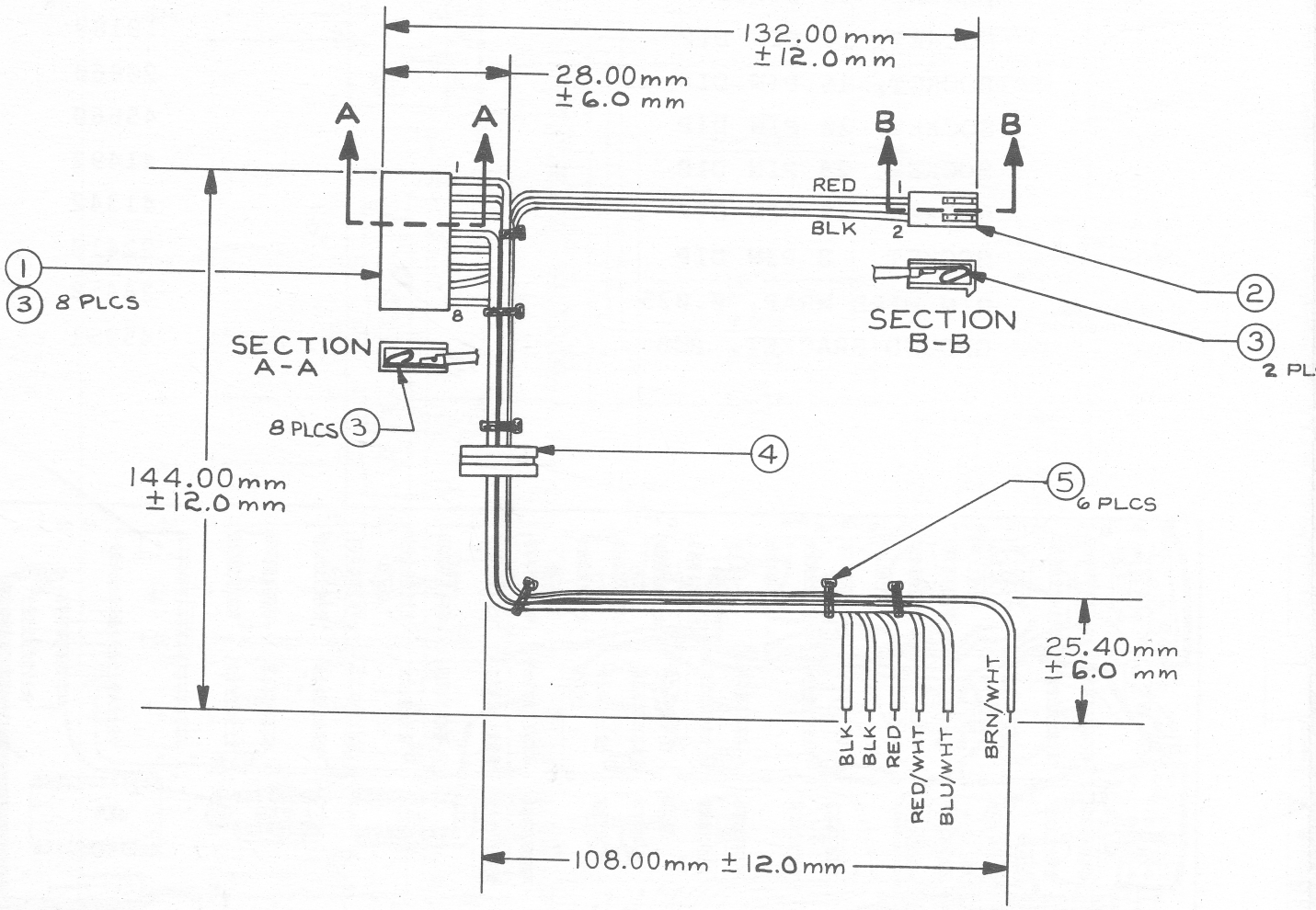

ITEM	QTY REQD	DWG SIZE	CLASS CODE	PART NO	MATERIAL OR DESCRIPTION
5	6	YC	—	6147	CABLE TIE
4	1	YC	—	47125	GROMMET, HORSESHOE
3	10	YC	—	45887	CRIMP TERMINAL
2	1	YC	—	46626	CONN, MOLEX, 2 PIN W/LOCK RAMP
1	1	YC	—	46633	CONNECTOR, MOLEX, 8 PIN

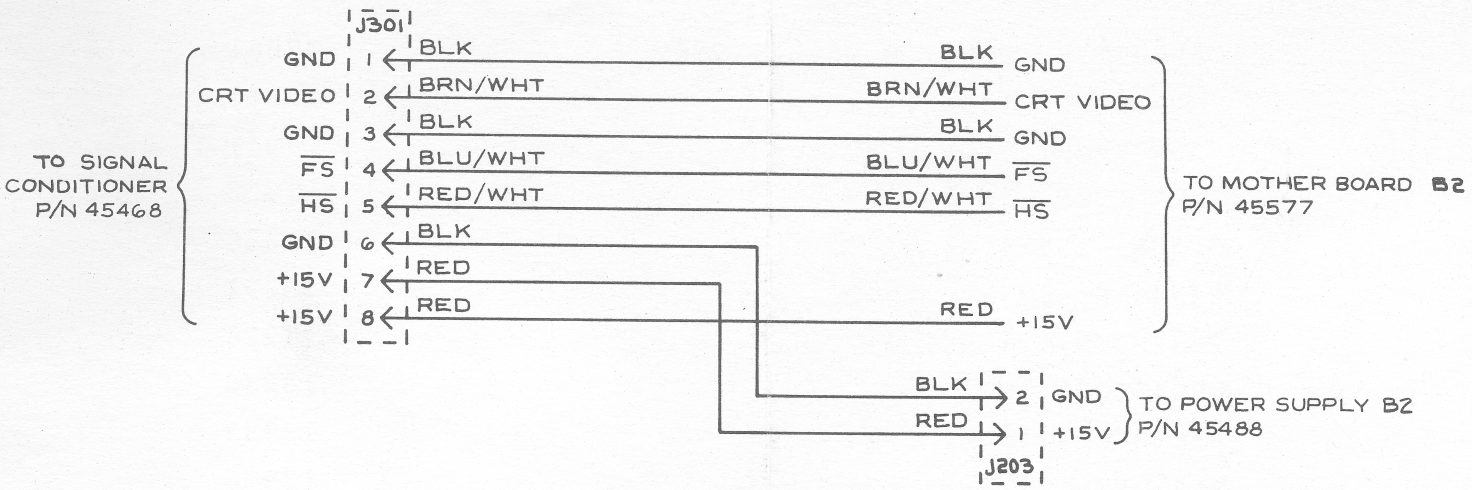

PLCS

Figure 5-8. Motherboard-to-CRT Cable Assembly (Part No. 47110)

5.4.3 Digital Circuit Assembly (Part No. 45237)

CIRCUIT NO.	DESCRIPTION	ESI PART NO.
C1,2,4,5,7 10-17,19-26	CAPACITOR, 0.01µF, 100V	12144
C3	CAPACITOR, POLY, 0.068µF, 250V	47081
C6	CAPACITOR, 100pF, 1kV	12241
C8,9,27	CAPACITOR, 25µF, 25V	1941
C18	CAPACITOR, 50pF, 1kV	1923
CR1,2	DIODE, 1N914	12356
R1	TRIMMER, 50kΩ	12091
R2	RESISTOR, 255kΩ, 1%	21228
R3	RESISTOR, 1MΩ, 1%	18236
R4-6,8,19	RESISTOR, 10kΩ, 10%, 1/4W	13933
R7	RESISTOR, 3.3kΩ, 10%, 1/4W	13926
R9	RESISTOR, 10kΩ, 1%	21740
R10	RESISTOR, 249Ω, 1%	21724
R11	RESISTOR, 1MΩ, 10%, 1/4W	13960
R12-14	RESISTOR, 2.2kΩ, 10%, 1/4W	13924
R15	RESISTOR, 33kΩ, 10%, 1/4W	13939
R16,18	RESISTOR, 100kΩ, 10%	13945
R17	RESISTOR, 1kΩ, 10%	13920
U1	IC AD7519JN	46476
U2,U12	DIP RESISTOR 10kΩ R698-3-R10K	43077
U3	IC, TL074	43299
U4	IC, 7406	20678
U5	IC, LM339	40849
U6	IC, 7474	26225
U7,U11	IC, 7400	20600
U8	IC, 7420	20604
U9	IC, REF02CJ OR MC1404U5	45654
U10	IC, 7404	20695
U13	IC, DAC08	44264
U14	IC, LF356	41473
U15,16,19, U22-25	IC, SN74LS163A	45647
U17	IC, 74S471 (PROGRAMMED)	46874
U18	IC, 74LS139	45656

CIRCUIT NO.	DESCRIPTION	ESI PART NO.
U20	IC, 7410	20603
U21,U28	IC, DP8304B	45262
U26	IC, DM8131	45527
U27	IC, 8255A	45650
U29	IC, 8253	45649
	CIRCUIT CARD DIGITAL	45236
	POWER BUSS STRIP	23997
	SOCKET, 14 PIN DIP	19189
	SOCKET, 16 PIN DIP	20860
	SOCKET, 20 PIN DIP	45660
	SOCKET, 24 PIN DIP	41492
	SOCKET, 40 PIN DIP	41342
	SOCKET, 8 PIN DIP	22410
	PIN WIRE WRAP, 0.025	24458
	GROUND BRACKET, PCB	45951

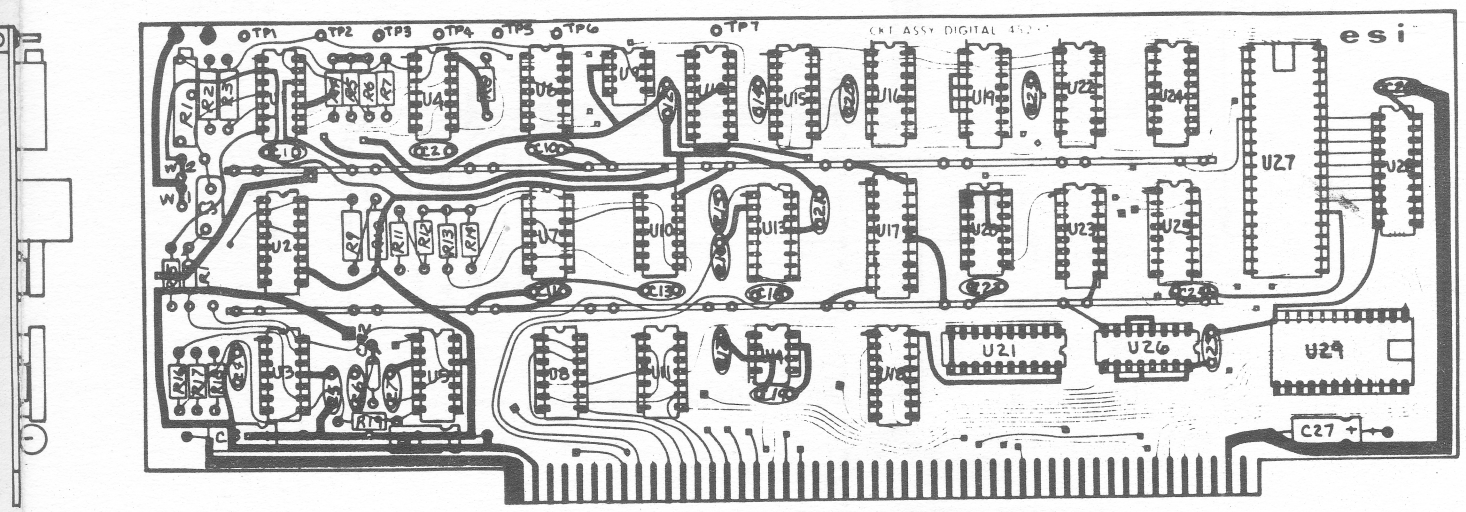

Figure 5-9. Digital Circuit Assembly (Part No. 45237)

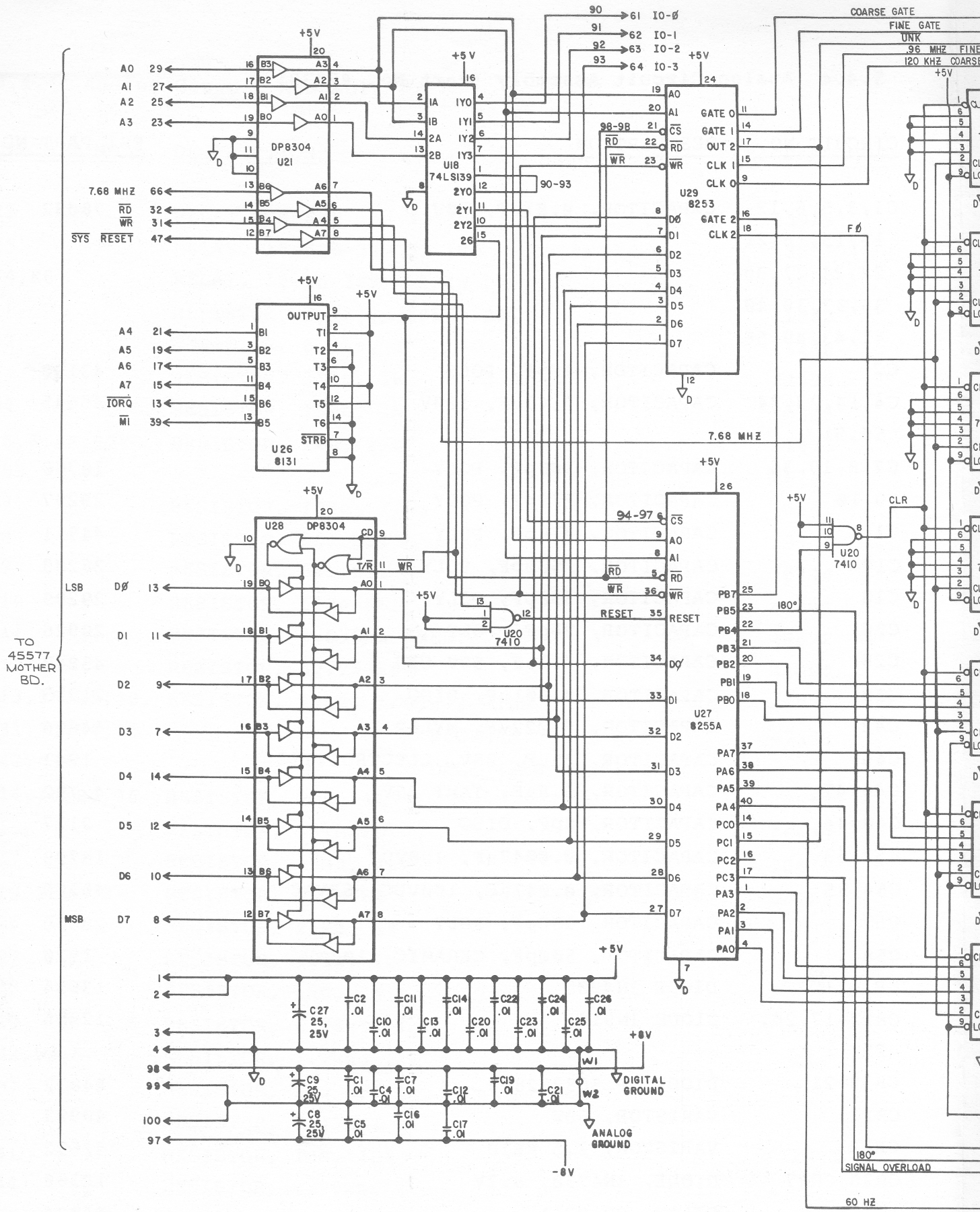
TO 45577 MOTHER BD.
LSB
MSB
DP8304 U21
U18 74LS139
U29 8253
U26 8131
U28 DP8304
U27 8255A
U20 7410
90-93
94-97
98-98
7.68 MHZ
RESET
COARSE GATE
FINE GATE
UNK
.96 MHZ FINE
120 KHZ COARSE
CLR
180°
SIGNAL OVERLOAD
60 HZ
DIGITAL GROUND
ANALOG GROUND
+8V
-8V
W1
W2

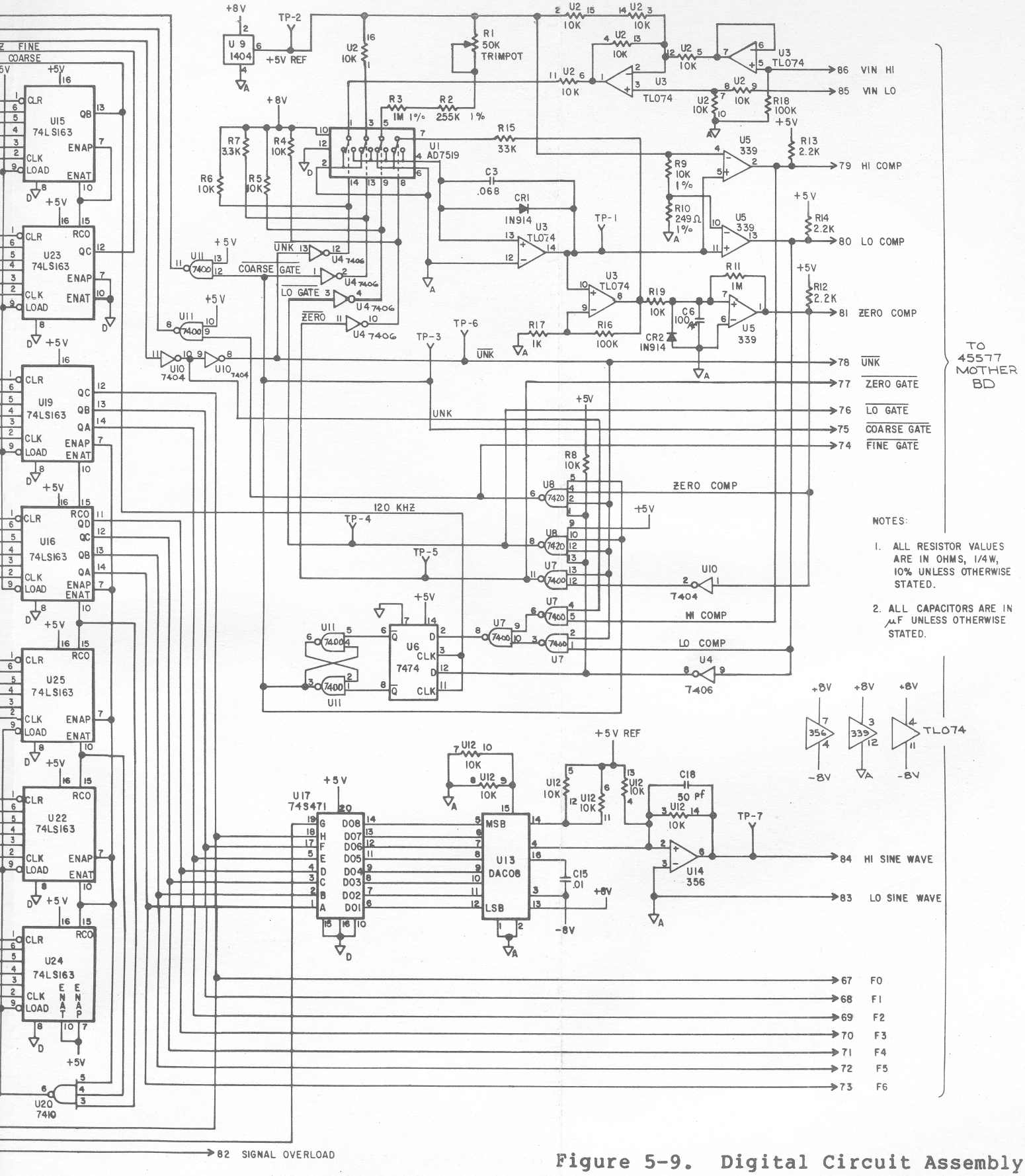

Figure 5-9. Digital Circuit Assembly (Part No. 45237) (cont)

5.4.4 Analog Circuit Assembly (Part No. 45239)

CIRCUIT NO.	DESCRIPTION	ESI PART NO.
C1,3,5,6,12 13,15,16,21 22,24-27,30- 35,37,38,40 41,43,49,56	CAPACITOR, 0.01µF, 50V	78032
C2	CAPACITOR, 10pF, POLY	43130
C4,14,23,24 50,51	CAPACITOR, 0.47µF, 100V	45645
C7,8,19,36	CAPACITOR, 100pF, POLY	18760
C9,10	CAPACITOR, 220pF, POLY	29297
C11	CAPACITOR, 470pF, POLY	44711
C17	CAPACITOR, 1500pF, POLY	26203
C18	CAPACITOR, 390pF, POLY	29299
C20	CAPACITOR, 20pF, POLY	20926
C28	CAPACITOR, 0.1µF, 50V CER	45247
C39	CAPACITOR, 0.001µF, DISC	21215
C42	CAPACITOR, 0.022µF, MYLAR	44626
C45	CAPACITOR, 25µF, 25V, ELECTROLYTIC	1941
C46,47	CAPACITOR, 6.8µF, TANT 35V	43792
C48,44	CAPACITOR, 8pF, DISC	2127
C52,53	CAPACITOR, 0.0047µF, 100VDC	13299
C54,55	CAPACITOR, 0.047µF, 100VDC, 63VAC	46200
C57	CAPACITOR, 150pF, POLY	29606
C58	CAPACITOR, 500pF, CERAMIC, 1000V	1920
CR1-11	DIODE 1N4005	13654
CR12-17,24, 25	DIODE 1N914	12356
CR18-21	DIODE HP 5082-2800	44832
CR22	VARISTOR, 68V	40993
CR23	VARISTOR, 1.5 KE10	42632
CR26,CR27	DIODE, 1N4738, 8.2V	12160
K1	RELAY, GB 821A	24804

5.4.4 Analog Circuit Assembly (Part No. 45239) (cont)

CIRCUIT NO.	DESCRIPTION	ESI PART NO.
K2	RELAY, GB 822	26667
K3	RELAY, 1805 B-300 ELECTRODYNE	46286
K4,K5	RELAY, 10-55-300	45659
R1	RESISTOR, 3.9kΩ, 1W, 10%	46478
R2	RESISTOR, 6.8kΩ, 1/2W, 10%	2075
R3	RESISTOR, 330Ω, 1W, 10%	12174
R4	RESISTOR, 150Ω, 1W, 10%	12171
R5,6,48,52, 53	RESISTOR, 1kΩ, 1/4W, 10%	13920
R7	RESISTOR, 100Ω, 1/4W, 10%	13907
R8	RESISTOR, 8Ω, ESI QB 0.005%	46552
R9	RESISTOR, 64Ω ESI QB 0.005%	46555
R10	RESISTOR, 512Ω ESI QB 0.005%	46554
R11	RESISTOR, 4.096kΩ ESI QB	46553
R12	RESISTOR, 32.768kΩ ESI QB 0.005% ±5 TG	41838
R13,18,25,30, 31,33,34,35, 42,43	RESISTOR, 10kΩ, 1/4W, 10%	13933
R14,16,24,36	RESISTOR, 2MΩ, 1%	21772
R15	RESISTOR, TRIMMER, 500kΩ (SIP)	46389
R17	RESISTOR, 15MΩ, 10%	13976
R19-23, 40	RESISTOR, TRIMMER 2kΩ	46388
R26	RESISTOR, 11kΩ, 1%	13359
R27	RESISTOR, 402Ω, 1/4W, 1%	21726
R28	RESISTOR, 1kΩ, 1%	21730
R29	RESISTOR, 6.98kΩ, 1%	22857
R32,50,51	RESISTOR, 2.2kΩ, 10%	13924
R37	RESISTOR, 1kΩ ESI QB	42631
R38	RESISTOR, 7kΩ ESI QB	22777
R41	RESISTOR, 1MΩ, 10%	13960
R44	RESISTOR, 4.99kΩ, 1/4W, 1%	21737
R45,46	RESISTOR, TRIMMER 10kΩ SIP	46204

CIRCUIT NO.	DESCRIPTION	ESI PART NO.
R47	RESISTOR, 150Ω, 1/4W, 10%	13909
R49	RESISTOR, 22kΩ, 1/4W, 10%	13937
R56,R57	RESISTOR, 10Ω, 10%, 1/4W	13895
R70,71	RESISTOR, TRIMMER, 10kΩ, 20T	41902
T1	TRANSFORMER	46480
TP1-7	WIRE WRAP PINS	24458
U1	IC, NE5534	46406
U2,3,6,8	IC, LF356N	41473
U4,10,20	IC, 4052AE	20743
U5	IC, CD4051	40841
U7	IC, LM311	29544
U9	IC, 4053AE	20744
U11,U13	IC, TL074	43299
U12	IC, 74LS288, PROGRAMMED	46872
U14,17,23	IC, AD7524JN DAC	45652
U15	IC, DIP RESISTORS R698-3-R10K	43077
U16	IC, SIP RESISTORS BECKMAN 765-1-R22K DALE 4310-R-101-222	47328
U18,U21	IC, 7475N	20614
U19	IC, UA759UIC	46479
U23	IC, 7406	20678
U24	IC, 74LS373	46201

5.4.4 Analog Circuit Assembly (Part No. 45239) (cont)

CIRCUIT NO.	DESCRIPTION	ESI PART NO.
	BUS, POWER STRIP	23997
	SOCKET, 14 PIN DIP	19189
	SOCKET, 16 PIN DIP	20860
	SOCKET, 8 PIN DIP	22410
	SOCKET, 10 PIN DIP	46481
	SOCKET, 20 PIN DIP	45660
	CONNECTOR, BNC ISOLATED	41820
	GRAY FUSE CARRIER 3AG	45966
	FUSE, 1/2A, 250V, 3AG	1802
	POST, FUSE BODY, HI PROFILE	45968
	JACK, 1/8", PHONO (TINI-JAX)	47082
	POST, BINDING	1435
	ALT. METRIC, 5 x 20 FUSE CARRIER (BLK)	45965
	PLUG, MALE MINIATURE PHONO	47083
	INSULATOR, X-FMR MTG	47275
	PC CARD ANALOG	45238
	SPACER, X-FMR BRACKET	46306
	PANEL, CONNECTOR	45162
	SLEEVING	5889
	SWING LUG, BINDING POST	3247
	BRACKET, X-FMR MTG	45164
	COAX	45643
	BRACKET, CONNECTOR PANEL	45161
	HEATSINK	47438
	SHRINK TUBE	15926

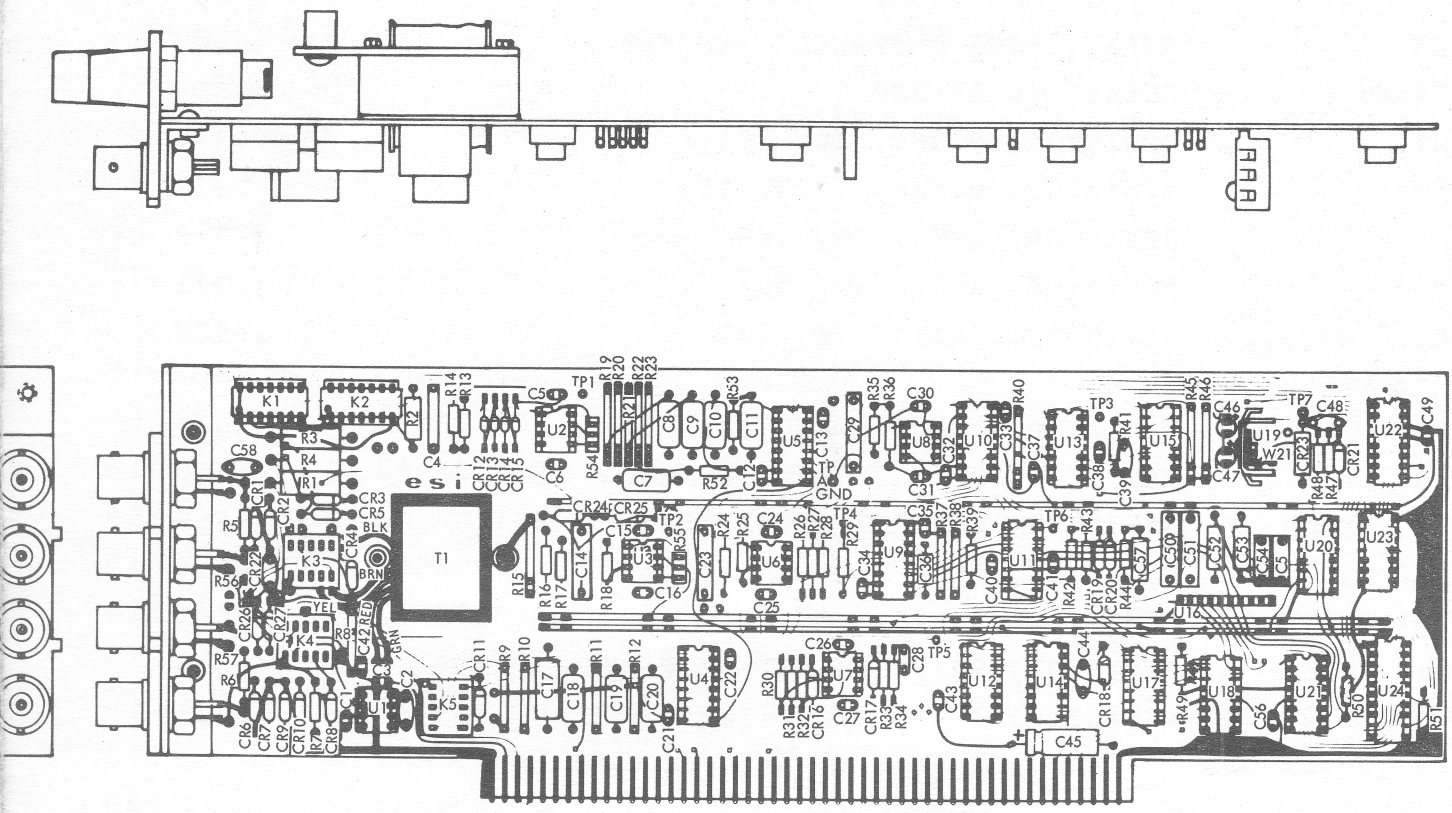

Figure 5-1Ø. Analog Circuit Assembly (Part No. 45239)

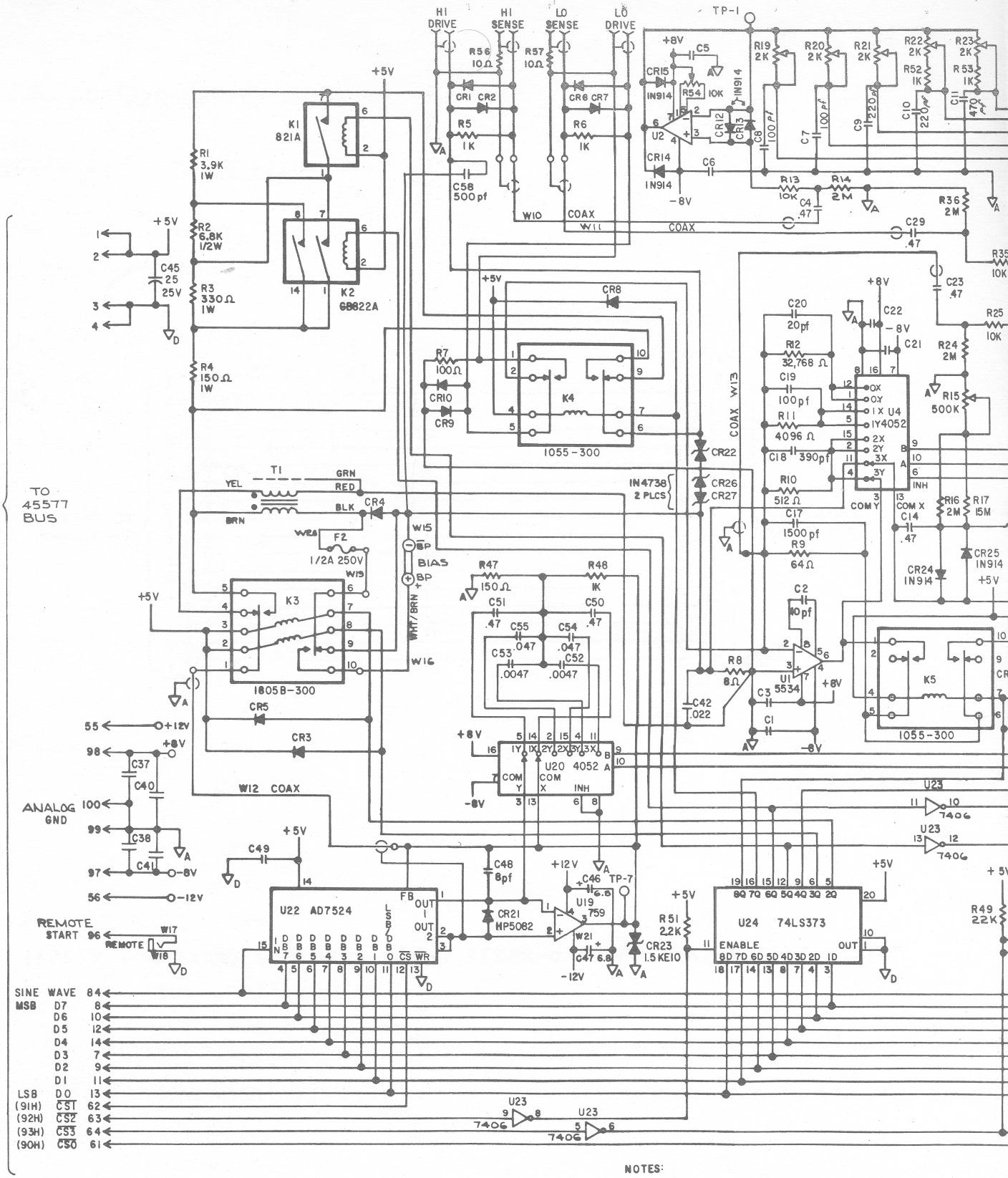

NOTES:

1. ALL RESISTOR VALUES ARE IN OHMS, 1/4 W, 10% UNLESS OTH
2. ALL CAPACITORS ARE IN μF , UNLISTED VALUES ARE .01 μF ,
3. ALL DIODES ARE IN4005 UNLESS OTHERWISE STATED.

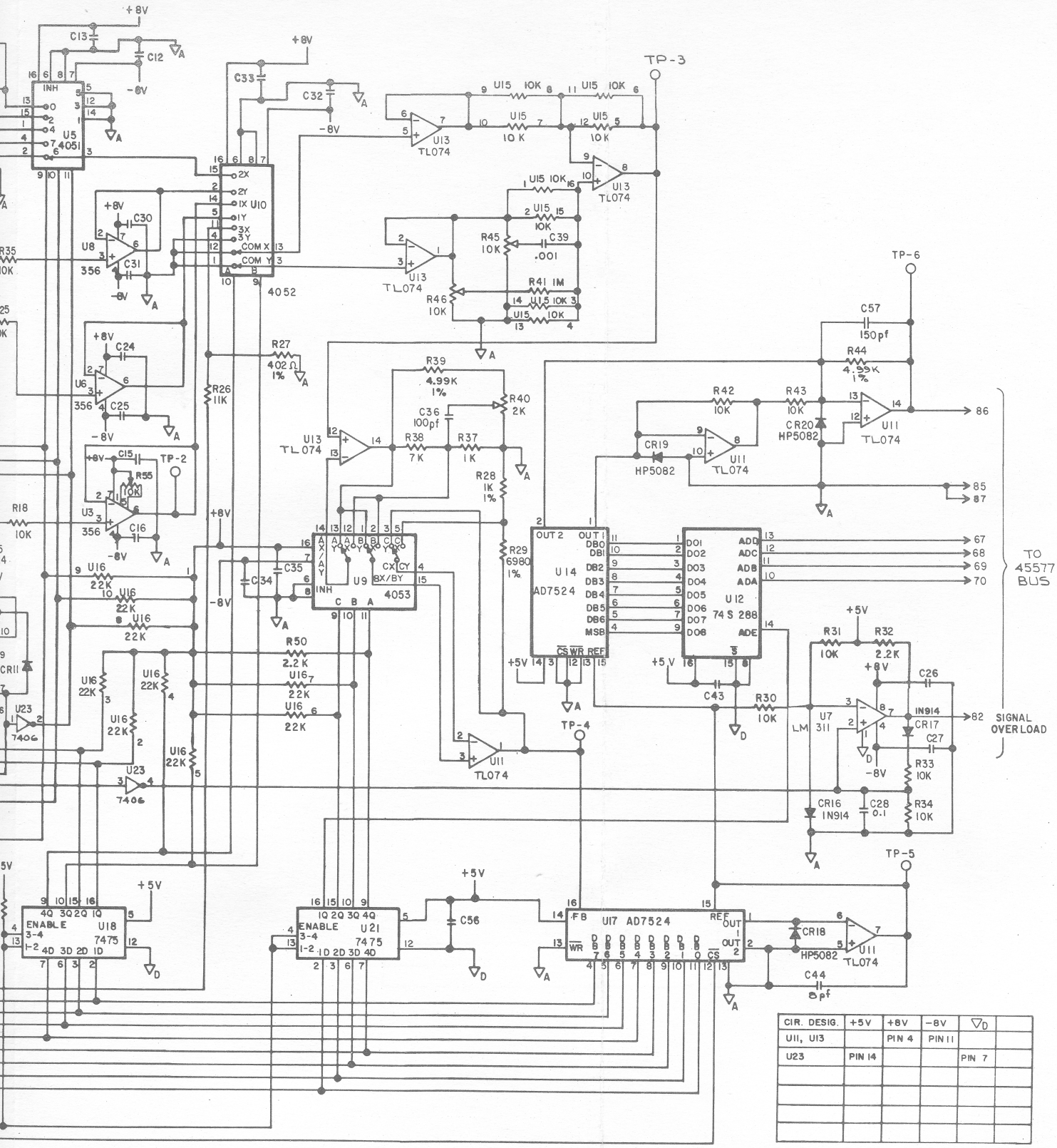

CIR. DESIG.	+5V	+8V	-8V	▽D	
U11, U13		PIN 4	PIN 11		
U23	PIN 14			PIN 7	

HERWISE STATED.
, UNLESS OTHERWISE STATED.

Figure 5-10. Analog Circuit Assembly (Part No. 45239) (cont)

5.4.5 Tape Deck-to-RS232 Cable Assembly (Part No. 47254)

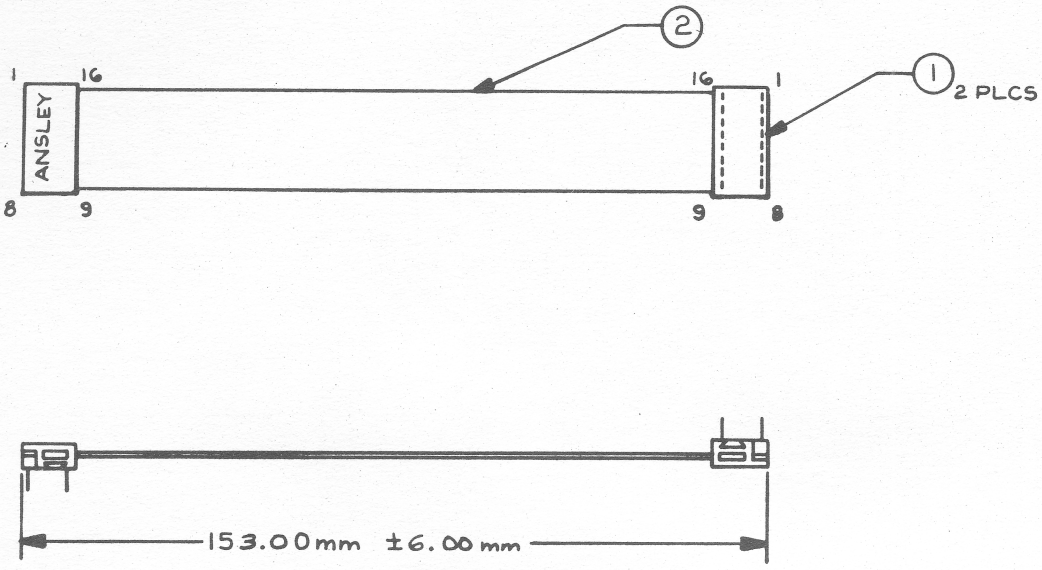

ITEM	QTY	MFG	CLASS	PART NO	MATERIAL OR DESCRIPTION
2	.5'	YC	—	44733	RIBBON CABLE
1	2	YC	—	43765	CONNECTOR, 16 PIN, ANSLEY

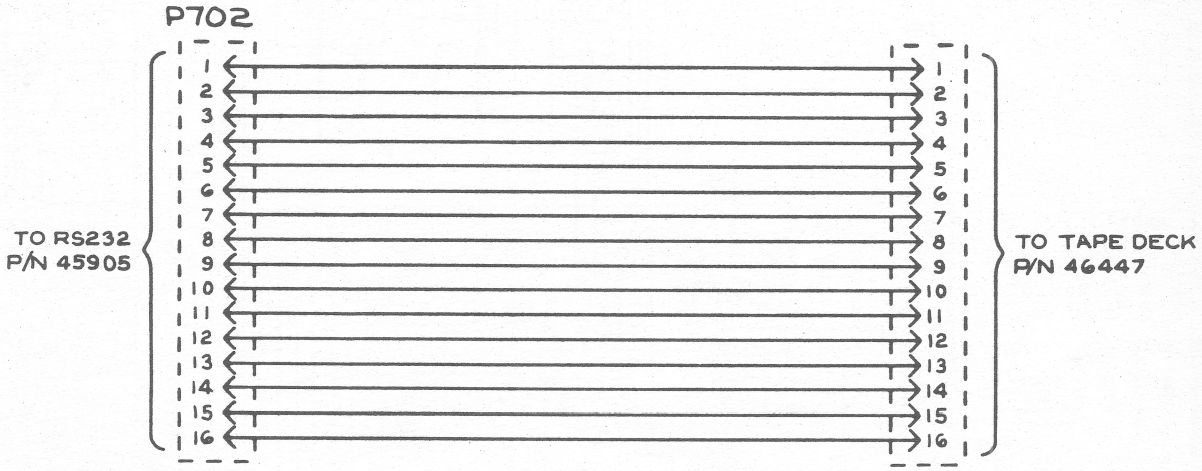

Figure 5-11. Tape Deck-to-RS232 Cable Assembly (Part No. 47254)

5.4.6 RS232/Cassette Interface Circuit Assembly (Part No. 45905)

CIRCUIT NO.	DESCRIPTION	ESI PART NO.
CR1	DIODE, 1N4734, 5.6V	12258
C1-6,8-21, 23-26	CAPACITOR, 0.01µF, ±20%	45658
C22,27,28	CAPACITOR, 0.01µF, 50V, DISC	12144
J701	CONNECTOR, DB25S	45983
R1,3,12,13	RESISTOR, 1kΩ, 1/4W, 10%	13920
R2,9,15,16	RESISTOR, 220Ω, 1/4W, 5%	13911
R4	RESISTOR, 2.7kΩ, 1/4W, 10%	13925
R8	RESISTOR, 47Ω, 1/4W, 10%	13901
R14	RESISTOR, 15MΩ, 1/4W, 10%	13976
U1	IC, 7406	20678
U2	IC, MC1489L	42302
U4,5,15-17	IC, IC74161	42622
U6	IC, 7442	20608
U7,28	IC, 7408	20717
U8,12,29	IC, 7404	20695
U9	IC, 8224	47319
U10	IC, 7402	20602
U13	IC, 74S257	45982
U14	IC, MC1488L	42301
U18,25	IC, 7400	20600
U19	IC, 7474	26225
U20	IC, µPD371NEC	45261
U21	IC, 74S471 (PROGRAMMED)	45655
U22	IC, MC14411	42933
U23	IC, Z80S10/9	45980
U26	IC, 8131	45527
U27	IC, 8304	45262
U30	RESISTOR PAK, SIP, 10 PIN, 2.2kΩ	45846
U31	RESISTOR PAK, SIP, 6 PIN, 2.2kΩ	45847
Y1	CRYSTAL, 1.8432MHz, 0.05% (HCIBU)	45974
Y2	CRYSTAL, 18MHz	47327

CIRCUIT NO.	DESCRIPTION	ESI PART NO.
	BRACKET, RS232	45815
	BRACKET, GROUND	45951
	CIRCUIT CARD, RS232/CASSETTE INTERFACE	45904
	SOCKET, 14 PIN DIP	19189
	SOCKET, 16 PIN DIP	20860
	SOCKET, 40 PIN DIP	41342
	SOCKET, 24 PIN DIP	41492
	SOCKET, 20 PIN DIP	45660
	SOCKET, 42 PIN	47277

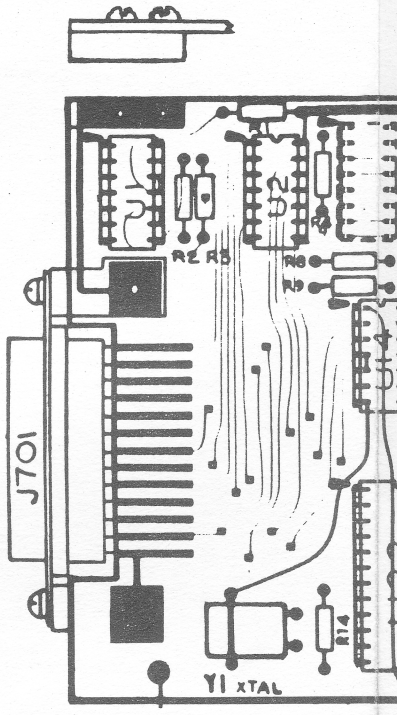

Figure 5-

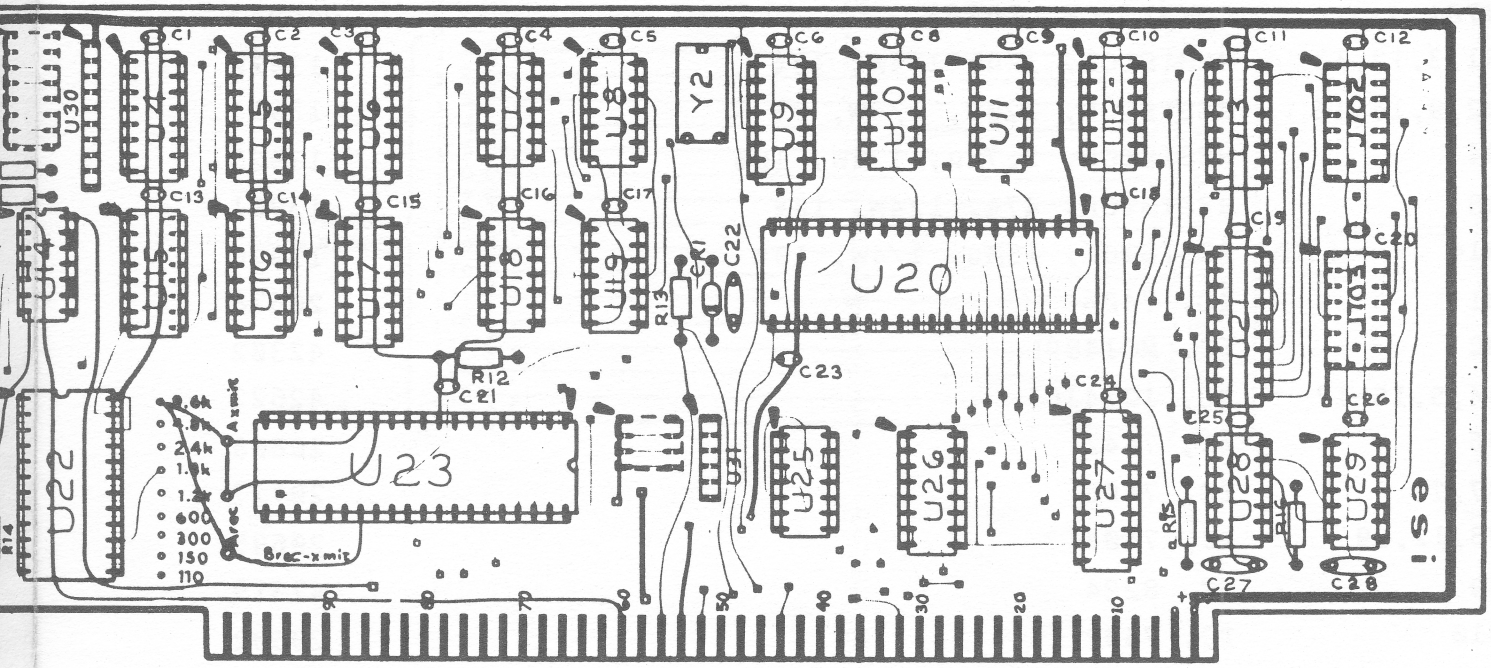

e 5-12. RS232 Cassette Interface Circuit Assembly (Part No. 45905)

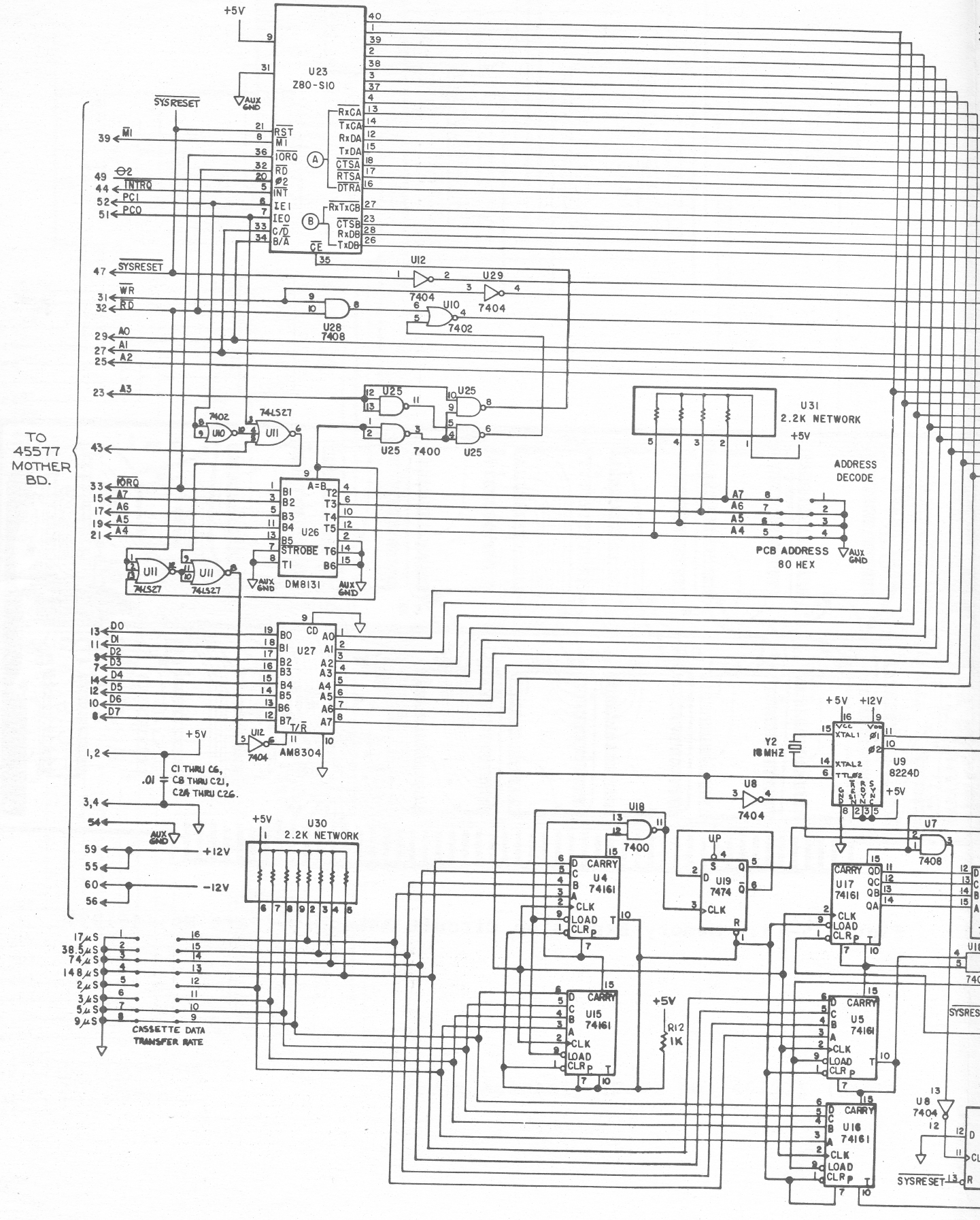
TO 45577 MOTHER BD.
+5V
U23 Z80-SIO
SYSRESET
AUX GND
RxCA
TxCA
RxDA
TxDA
CTSA
RTSA
DTRA
RxTxCB
CTSB
RxDB
TxDB
U12
7404
U29
U10
7402
U28
7408
U25
7400
U31
2.2K NETWORK
ADDRESS DECODE
PCB ADDRESS 80 HEX
74LS27
U26
DM8131
U27
AM8304
C1 THRU C6, C8 THRU C21, C24 THRU C26.
.01
U30
2.2K NETWORK
+12V
-12V
17µS
38.5µS
74µS
148µS
2µS
3µS
5µS
9µS
CASSETTE DATA TRANSFER RATE
Y2
18 MHZ
U9
8224D
U8
U7
U18
U4
74161
U19
7474
UP
U17
74161
U15
74161
U5
74161
U16
74161
R12
1K
CARRY
CLK
LOAD
CLR
SYSRESET

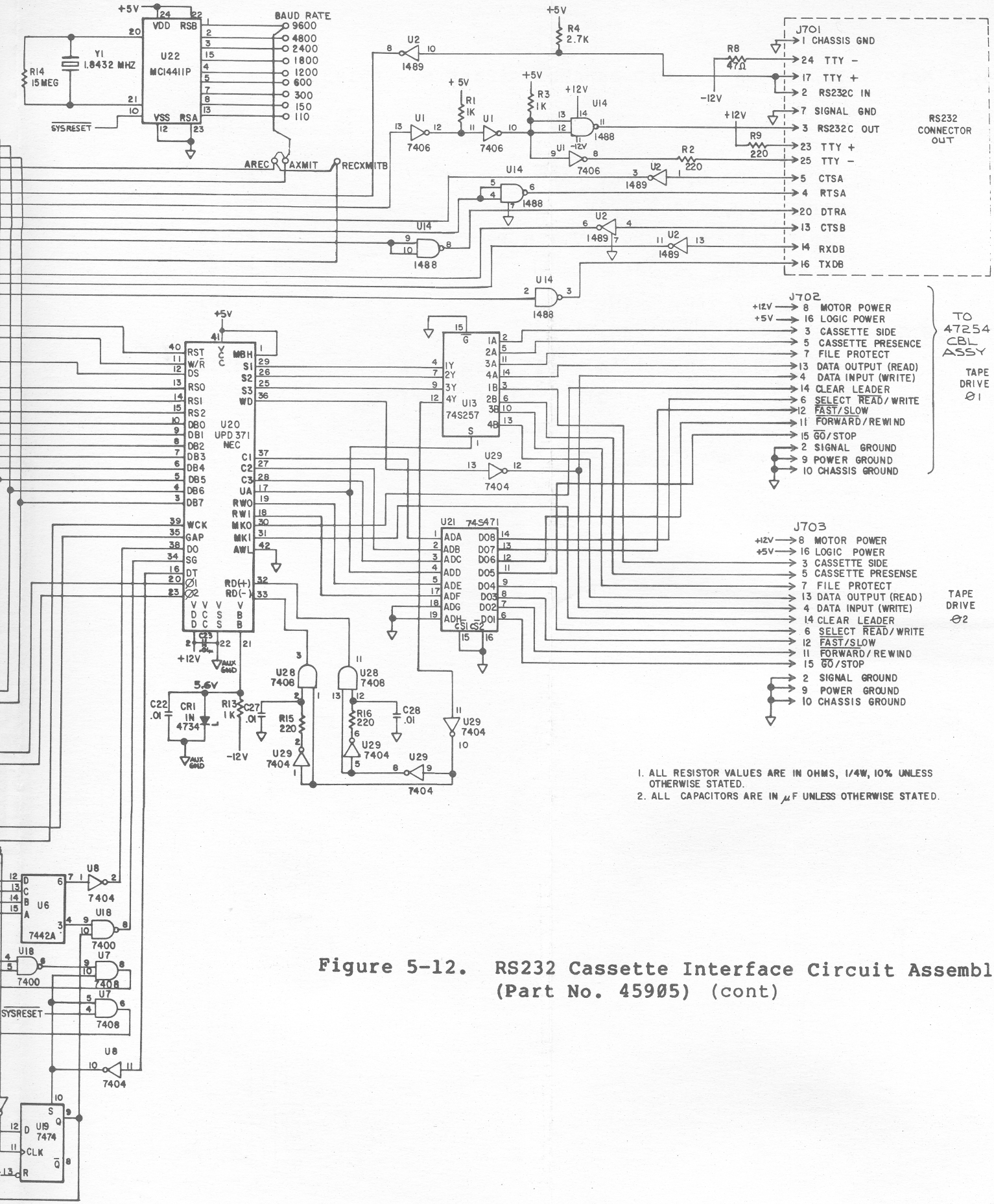

Figure 5-12. RS232 Cassette Interface Circuit Assembly (Part No. 45905) (cont)

5.4.7 Memory Expansion Circuit Assembly (Part No. 46193)

CIRCUIT NO.	DESCRIPTION	ESI PART NO.
	CIRCUIT CARD, MEMORY CARD	46192
C1	CAPACITOR, 100µF, 25V, ELECT	13683
C2-20	CAPACITOR, 0.01µF, 50V, CHIP	45658
Q1	TRANSISTOR, 2N3904	18751
R1,5	RESISTOR, 47Ω, 1/4W, 10%	13901
R2,3,4,6,8	RESISTOR, 1kΩ, 1/4W, 10%	13920
R7,9	RESISTOR, 330Ω, 1/4W, 10%	13913
U9,17,18,19	IC, 8304, OCTAL BI-DIRECTIONAL BUFFERS	45262
U11	IC, 7400, QUAD 2 INPUT NAND	20600
U20,21	RESISTOR PAK, 330Ω SIP	46072
	POWER BUSS STRIP	23997
	IC SOCKET, 14 PIN	19189
	IC SOCKET, 16 PON	20860
	IC SOCKET, 20 PIN	45660
	IC SOCKET, 28 PIN	43844

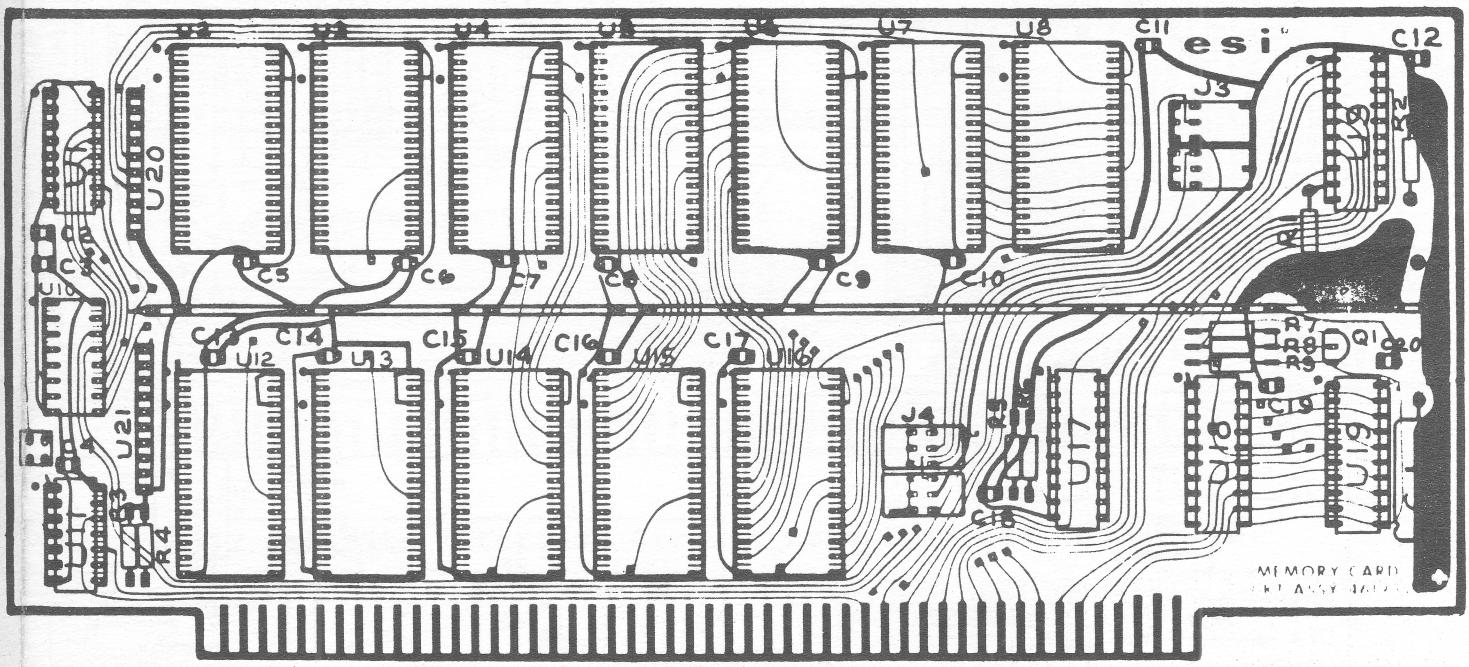

Figure 5-13. Memory Expansion Circuit Assembly (Part No. 46193)

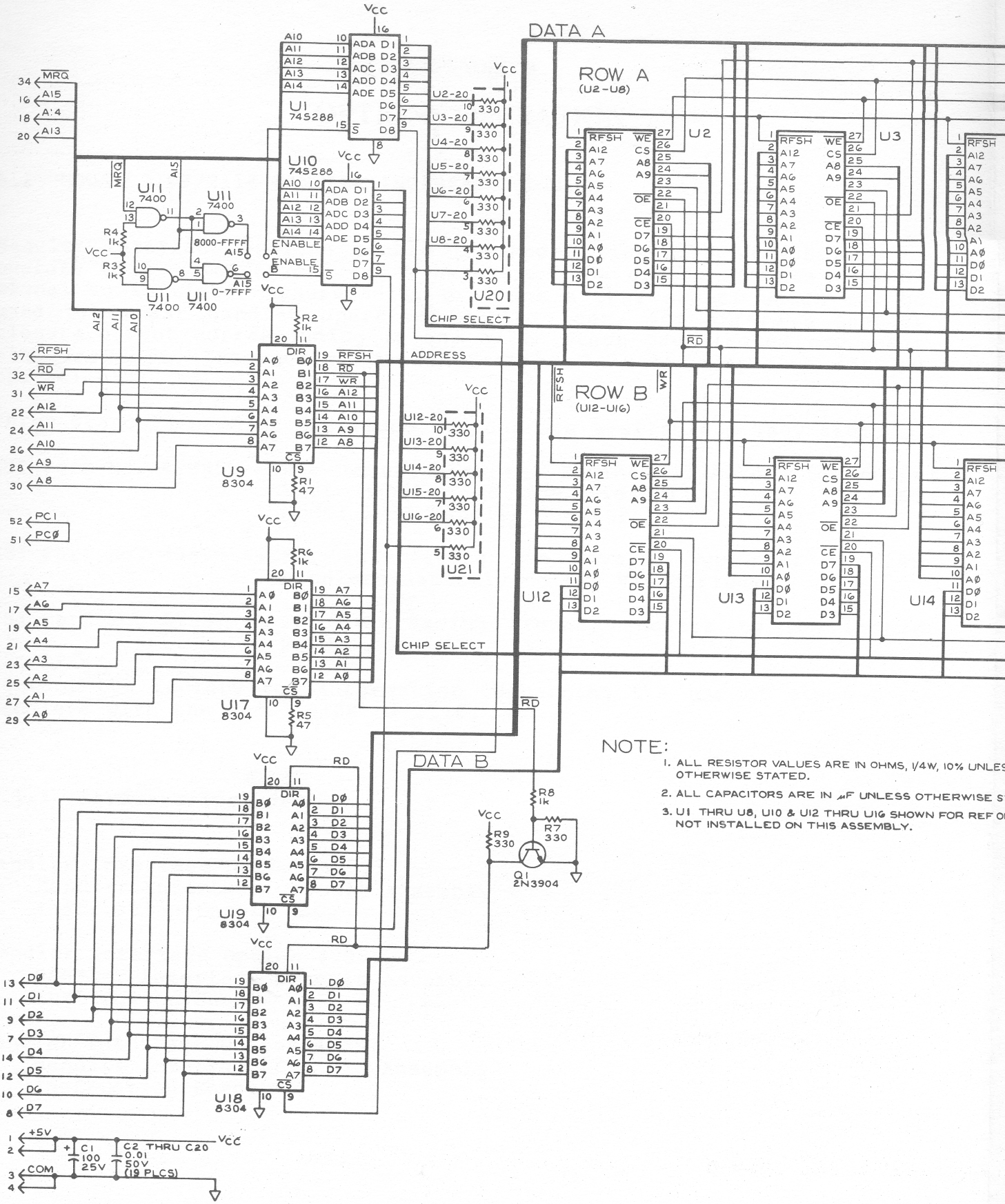
DATA A
ROW A
(U2-U8)
DATA B
ROW B
(U12-U16)
ADDRESS
CHIP SELECT
U1
745288
U10
745288
U11
7400
U9
8304
U17
8304
U18
8304
U19
8304
U20
U21
U2
U3
U12
U13
U14
R1 47
R2 1k
R3 1k
R4 1k
R5 47
R6 1k
R7 330
R8 1k
R9 330
Q1
2N3904
C1
100
25V
C2 THRU C20
0.01
50V
(19 PLCS)
+5V
COM
8000-FFFF
0-7FFF
NOTE:
1. ALL RESISTOR VALUES ARE IN OHMS, 1/4W, 10% UNLES
OTHERWISE STATED.
2. ALL CAPACITORS ARE IN μF UNLESS OTHERWISE S
3. U1 THRU U8, U10 & U12 THRU U16 SHOWN FOR REF O
NOT INSTALLED ON THIS ASSEMBLY.

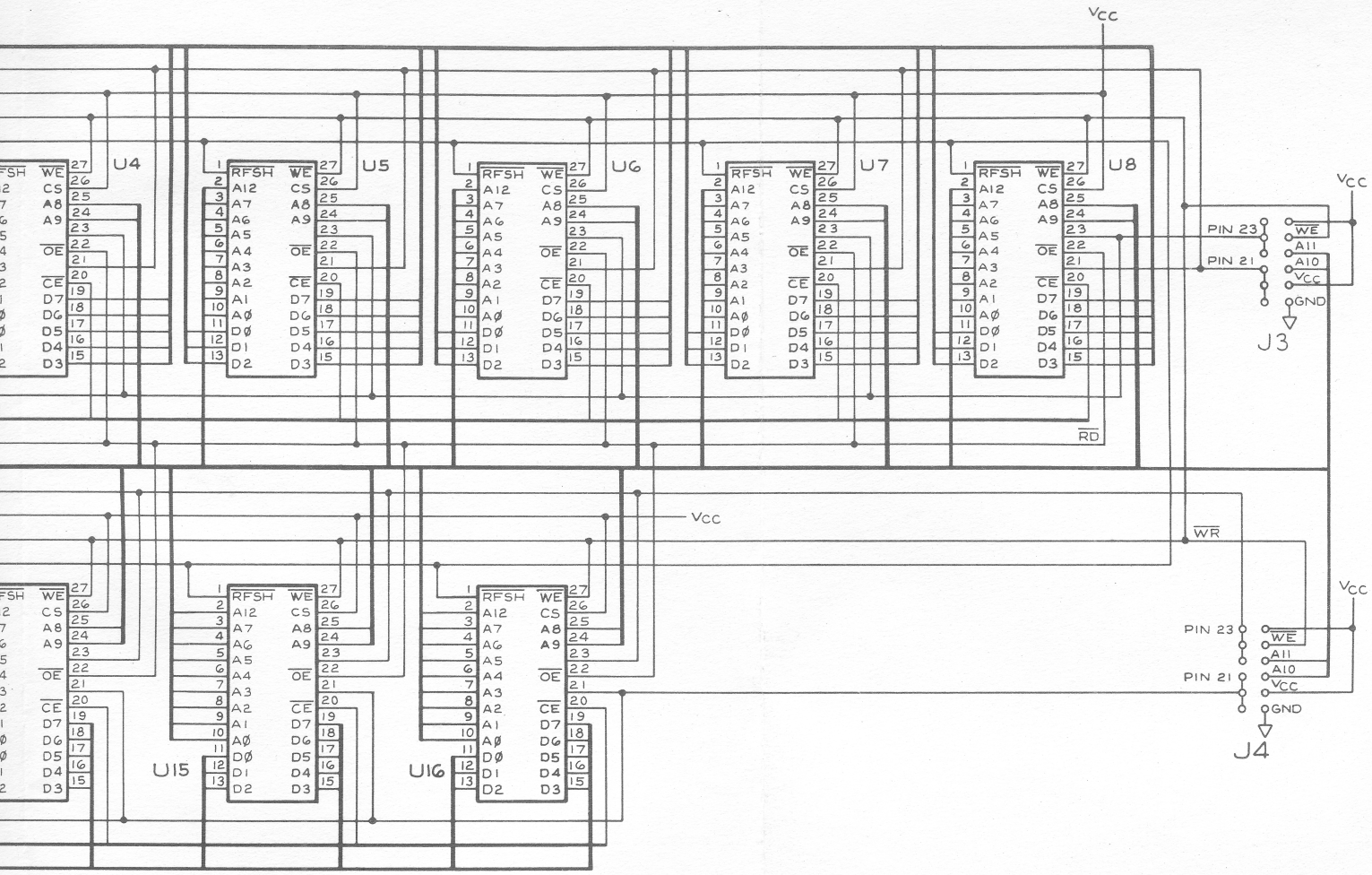

UNLESS
ISE STATED.
REF ONLY.

POWER CONNECTIONS

DEVICE	TYPE	GND	Vcc
U1, U10	74S288	8	16
U9, U17, U18, U19	8304	10	20
U11	7400	7	14
U2-U8, U12-U16	MEMORY	14	26,28

U20 & U21

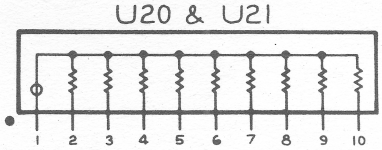

RESISTOR NETWORK 330Ω 10 PIN SIP

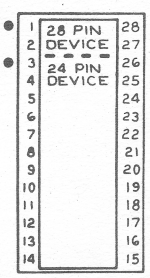

Figure 5-13. Memory Expansion Circuit Assembly (Part No. 46193) (cont)